NO. 60 NOTES FROM THE SHOP $3.50

Woodsmith®

Woodsmith®

Number 60 **December, 1988**

Editor **Donald B. Peschke**
Design Director **Ted Kralicek**
Managing Editor **Douglas L. Hicks**
Assistant Editors **Douglas M. Lidster**, **Kent A. Buckton**
Project Designer **Ken Munkel**
Technical Illustrators **David Kreyling**, **Cary Christensen**, **Rod Stoakes**, **Chris Glowacki**
Customer Service **Sandy Baum, Mgr.**, **Jackie Stroud**, **Pat Koob**, **Lisa Thompson**
Project Supplies **Leslie Ann Gearhart**, **Terry J. Strohman**
Computer Operations **Ken Miner**
Administrative Assts. **Cheryl Scott**, **Jean Carey**
Building Maintenance **Archie Krause**

The Woodsmith Store

Operations **Steve Krohmer**
Marketing Manager **Steve Dozier**
Store Managers:
St. Louis, MO **Jon Behrle**
Berkeley, CA **Michael DeHaven**
Des Moines, IA **Kent Welsh**

WOODSMITH (ISSN 0164-4114) is published bimonthly (February, April, June, August, October, December) by Woodsmith Publishing Co., 2200 Grand Ave., Des Moines, IA 50312.
Woodsmith is a registered trademark of Woodsmith Publishing Co.

©**Copyright 1988** by Woodsmith Publishing Co. All Rights Reserved.

Subscriptions: One year (6 issues) $12.95, Two Years (12 issues) $22.95. Canada and Foreign: add $2 per year, U.S. funds only. Single copy price, $3.50.
Second Class Postage Paid at Des Moines, Iowa.
Postmaster: Send change of address to Woodsmith, Box 491, Mt. Morris, IL 61054.
SUBSCRIPTION QUESTIONS? Call toll free 800-435-0715 (Illinois residents call 800-892-0753). Hours: 7:30 AM to 8:30 PM, Central Time, weekdays only.
BACK ISSUES: For a free booklet describing all of the back issues, send to *Woodsmith*, 2200 Grand Ave., Des Moines, IA 50312.
SAMPLE COPY: We will send a free sample copy of *Woodsmith* to anyone. Just send us his/her name and address.

Sawdust

ABOUT THIS ISSUE. History repeats itself, or so they say. I hadn't really thought much about that in terms of *Woodsmith* until we started work on this issue.

Woodsmith actually got started in July 1978 when I began work on the first issue. As it turns out, ninety-nine years earlier, in May 1879, my great grandfather, Emil Peschke, started his own company.

Why am I mentioning this now? The company Emil started was a "Manufacturer of all kinds of Mouldings, Picture Frames and Curtain Poles." (I'm lucky enough to have one of the business forms he used back then. We incorporated it into the cover photo of this issue.)

So, it's coming full cycle, and I'm finally getting around to making the picture frames that seem to be part of my heritage. Of course, the moldings we're showing in this issue are not nearly as ornate as those Emil made 100 years ago. But styles change.

PICTURE FRAMES. What was so much fun, though, was coming up with a variety of frames using a limited amount of machinery. We decided to limit the work to using a router table to form the profiles. This meant we had to make all the profiles with router bits. Is this *too* limiting?

At first, I thought it would be. But then I began looking at the dozens of router bit profiles available. There were actually too many choices. So, we took another approach. All of the profiles are made by using only three standard router bit profiles (straight, round-over, and core box).

Using different sizes of these bits, we were able to come up with several dozen profiles. Then it became a matter of choosing which ones to show in this issue.

We settled on 10 profiles. Some are very simple, some are complex. The key to the complex ones is that they are really just combinations of the simple ones. That is, the complex moldings we're showing don't have to be one strip of wood that's formed by a very complex bit.

Instead, make several strips with just one profile on each strip. Then join them together. Combinations like this are almost endless. All that has to be done is to find new ways of arranging the strips to create new profiles. It's just a matter of using your imagination.

PROJECT SUPPLIES. In the last issue, I talked about the project supplies for the projects shown in *Woodsmith*. We are beginning to go back to projects shown in past issues and trying to find sources for those supplies. (For some of these past projects, we sometimes listed a source that has since stopped carrying the items.)

So far, we've added the supplies for three of these past projects. First is the clock movement (either brass keywind or quartz/battery), dial, door glass (which is stenciled as shown in the issue) and the hardware for the Regulator Clock shown in *Woodsmith* No. 36.

As a result of a number of requests, we are offering more choices for the Cradle shown in *Woodsmith* No. 48. The cradle was originally shown in oak. We now offer the spindles (and the buttons) in oak, cherry, and walnut.

If you wanted to build the European Workbench shown in *Woodsmith* No. 50, you may have had trouble getting the vises. It was *not* the fault of Woodcraft Supply (the mail-order source we listed). They did an admirable job of trying to get and keep the vises in stock. The problem was with the manufacturer.

We have talked directly with the manufacturer and have received a shipment of the vises for the workbench. You can still order from Woodcraft Supply, and we are also trying to keep some on hand.

LOGO ITEMS. One of the things I didn't mention was the addition of the "logo" items. We now have a shop apron, a coffee mug, and a corduroy cap — all with the *Woodsmith* logo on them.

To be honest about all this, I resisted offering this type of thing for many years. But what triggered it was a simple need. I wanted a good shop apron.

The typical blue denim ones I've seen in some catalogs and stores just weren't the quality I wanted. And worse, the pockets were too small and in the wrong places. So, we designed our own. Actually, Terry Strohman designed it....

NEW FACES. Terry joined our Project Supply team this past fall. He worked in the *Woodsmith Store* here in Des Moines for about a year. Then we recruited him to help with the "front end" work for the project supplies.

In addition to designing the shop apron and getting the other logo items lined up, Terry has been working on all the details you never think about . . . getting telephone lines in for the 800 number, designing the forms needed to take orders and to ship them, and trying to think of ways to make the entire process more efficient. He has had several headaches.

But things are progressing. And with Terry's help, we hope to offer a wider range of service for all *Woodsmith* project supplies.

NEXT MAILING. The next issue of *Woodsmith* will be mailed during the week of February 27, 1989.

Tips & Techniques

FRAMING A 45° ANGLE

When I set up the table saw for cutting miters, I use a little geometry to adjust the miter gauge for 45°.

To get a 45° angle, I use a framing square and form an *isosceles* triangle. (An isosceles triangle has two equal sides, and two 45° angles.)

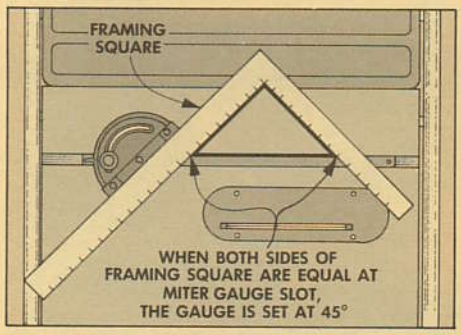

To set the miter gauge to a true 45° angle, set the framing square on the top of the table saw. Now align the same measurements on both arms of the framing square right against the edge of the miter gauge slot.

Next loosen the miter gauge locking knob and gently snug the gauge up against the framing square. The miter gauge is now set at exactly 45°. Then, tighten down the locking knob and you're ready to cut a 45° miter.

Eric Schneidmiller
Lompoc, California

Editor's Note: This tip will work only if the saw blade is parallel with the miter gauge slot. If the blade is not parallel, the angles are always going to be off no matter how exact the miter gauge has been set. Also, check to make sure that your framing square is truly square.

RIGHT LENGTH ON SHORT DOWELS

I use quite a few short dowels for gluing joints together. And I've had more than just a few problems cutting various short lengths from raw dowel stock. The lengths are usually inconsistent, and sometimes, when cutting the dowels on the band saw, they would be caught between the blade and the rip fence. This not only ruined the dowel but became a safety hazard as well.

I resolved these problems by making a very simple jig from 2 x 4 stock that can cut four different sized dowel diameters on the band saw. The jig (as shown in the drawing in the middle column) will also cut off dowels in ½" increments up to 2" long.

To make this jig, start by cutting the stock 6" long. Now, to determine where to drill holes for the different sized dowels, mark a centerline along the thickness of the block.

Next make marks on this centerline 1" and 2" from each end of the block. Then drill the four dowel holes (¼", ⅜" ½" and ¾") completely through the block. (Drilling through the block allows the dowel to be pushed through so one end is against the fence when cutting.)

In addition to cutting different diameter dowels, I also wanted the jig to cut the dowels to different lengths. To do this, lay the block down on the band saw (so the holes are horizontal) and cut 2½"-long saw kerfs at ½" intervals on both ends of the block.

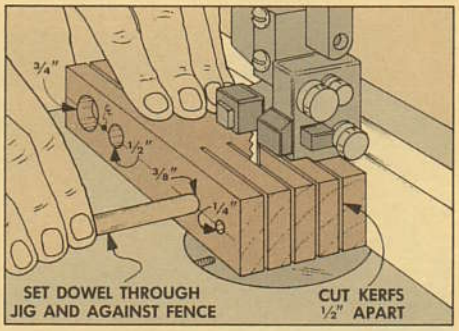

To use the jig, align the fence so the blade fits into the kerf slot. Insert the dowel stock into the correct diameter hole until the end of the dowel is against the fence. Now hold the jig and dowel and cut through the dowel. Slowly back the jig out, and push the finished dowel out the edge of the jig using the uncut dowel stock. Repeat the procedure to get the same length dowels.

Harold Stalder
State College, Pennsylvania

CHEAP SCRAPER

Here's a technique that I've been using for some time now with great success. It's called doctor blading and I use it for a variety of purposes. My main use though is to remove any glue that shows up while staining, especially along the edge seams on glued boards or in tight corners.

The doctor blade is a single-edged razor blade mounted in a handle. The handle is made from a ¼"- thick piece of scrap measuring 1½" wide by 6" long.

To make the handle fit comfortably in your hand, draw a hand contour on the scrap and cut it out on the band saw. Then cut a ⅝"-deep band saw kerf in one end to hold the blade. (The band saw cuts about a 1/16"-wide kerf.) You can also use a coping saw or a back saw.

To pinch the blade tight in the kerf, I use a ⅛"-dia. machine screw and nut. Drill a ⅛"-dia. hole, centered on the width of the handle ¼" from the leading edge. Now bevel the front edges of the handle so more blade can be used.

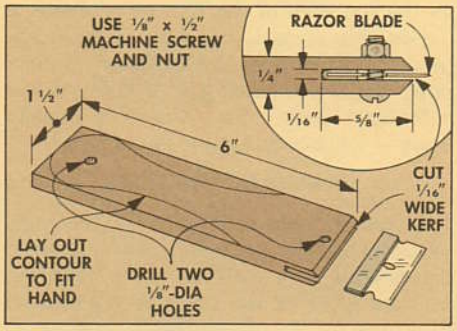

Single-edged razors have a small hole in the center of the blade that needs to be enlarged to accept the machine screw. Since the metal in the razor blade is very brittle I just used a pair of needle-nose pliers to snip out a larger center hole.

Insert the razor into the saw kerf from the side so the back of the blade is flush with the bottom of the saw kerf. (Be careful not to push the sharp edge of the blade.) Then tighten down the blade with the machine screw and nut.

When using the scraper, just push or pull the scraper to scrape the workpiece.

Carl Faix
Cherry Hill, New Jersey

SPOUT CAP

If you're always losing the small spout caps from containers or small cans, get some help from electricians.

I keep a variety of the small diameter electrician's twist-on wire connectors (sometimes called wire nuts) in the shop. When I lose a cap from a can or glue bottle, I just screw on one of these nifty twist-on wire connectors.

Fred Wurtzell
Darien, Connecticut

SEND IN YOUR IDEAS

If you'd like to share a woodworking tip with other readers of *Woodsmith*, send your idea to: *Woodsmith*, Tips & Techniques, 2200 Grand Ave., Des Moines, Iowa 50312.

We pay a minimum of $10 for tips, and $15 or more for special techniques (that are accepted for publication). Please give a complete explanation of your idea. If a sketch is needed, send it along; we'll draw a new one.

Step Stool

A STEP IN THE RIGHT DIRECTION

Life is too short. For a four-year-old, that means you need a stool because you're too short to reach the sink to brush your teeth. For an adult, it means you're still using the same stool to reach all the way back on the top shelf of the kitchen cabinets.

For this project, we used a basic approach. The step stool is made of common pine, which is another way of saying it has a "country look." The joinery is equally basic — tongue and groove joints.

EDGE-GLUE THE SIDES

I began by making the two side (leg) pieces. The trick to making two mirrored pieces is to start with *one* blank, see Fig. 1. Then after all the grooves are routed, it's cut in half to create the two pieces.

GLUE-UP. To make the blank, start by edge-gluing three pieces of 1x6 pine to create a blank that's roughly 16½" wide and 29" long.

CUT TO SIZE. After the glue dries, plane or belt-sand the blank flat. Then cut it to a width of 14" and 28" long, see Fig. 1.

LAY OUT LINES

After the blank is cut to size, two dadoes, a groove, and a rabbet are routed to join the other pieces of the stool, see Fig. 1.

DADOES. Start by laying out a ½"-wide dado for the bottom step 6⅜" from each end. This is a stopped dado, so mark the stop line ¾" from the front edge.

GROOVE. Next, lay out a ½"-wide groove to hold the riser. It's located 6¾" from the front edge of the blank and connects the two dadoes.

BACK RABBET. Finally, lay out a rabbet along the back edge for the back panel. The width of the rabbet should equal the thickness of your stock (¾").

ROUTER GUIDE JIG

After the layout is done, you can begin routing. To help align the cuts on the lines, I made a simple guide jig for the router.

BUILD JIG. The jig is just a fence nailed to an 8"-wide base of ¼" Masonite or plywood, see Fig. 2. Rip a straight fence and nail it to the base so the back edge is 2" from one edge, see Fig. 2. (The 2" lip is used to clamp the jig to the workpiece.)

CUT OFF EDGE. The nice part about the jig is that you can use it to get perfect alignment with your layout lines. The key is that the bit cuts on the edge of the jig.

To accomplish this, mount a ½" straight bit in the router. Then clamp the jig down and run the router along the fence so the bit cuts the waste off the front edge. Now

MATERIALS LIST

Overall Dimensions: 19" w x 14⅝" d x 14" h	
A Sides (2)	¾ x 14 — 13¼
B Riser (1)	¾ x 6¼ — 16¾
C Step (1)	¾ x 12⅞ — 16¾
D Back Panel (1)	¾ x 7 — 16¾
E Lid (1)	¾ x 9⅛ — 19

CUTTING DIAGRAM

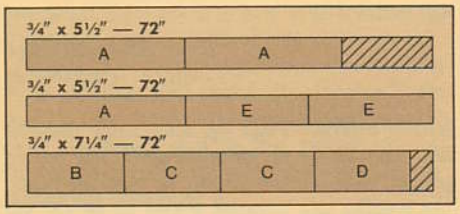

FIGURE 1

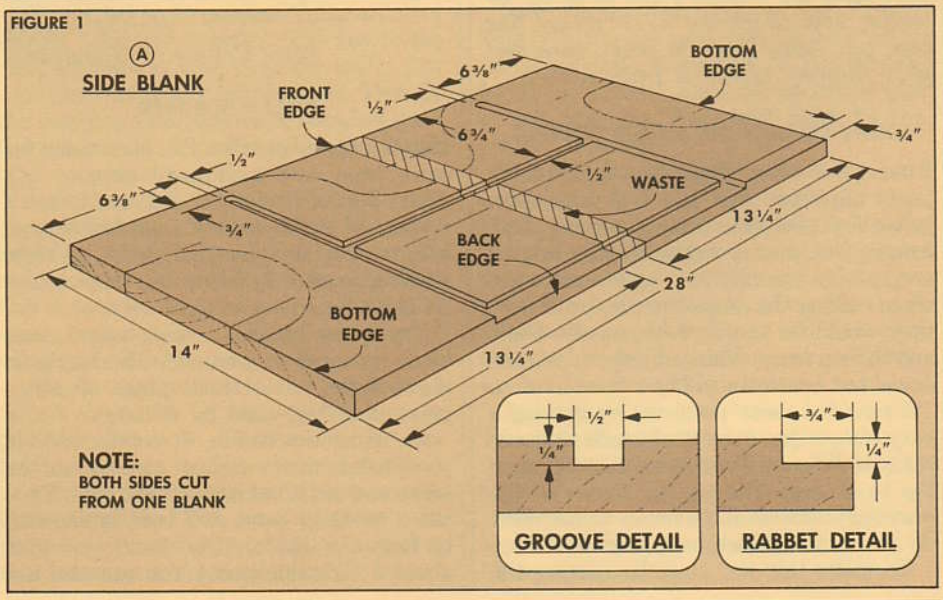

the cut edge is exactly in line with the path of the bit, see Fig. 2.

ROUTING

After the jig is complete, it can be used to rout the two dadoes, the groove, and the rabbet on the blank.

ROUT DADOES. Before routing, I clamped the side blank (A) on top of a couple of sawhorses, see Fig. 3. Then I clamped the jig in place so its edge is aligned with the left edge of the left dado line, see Step 1, Fig. 4.

Set the depth of the router bit so it cuts a ¼"-deep groove in the blank — taking into consideration the thickness of the jig's base. (Since the base of my jig was ¼" thick, I set the depth of cut at ½".)

Now set the router against the fence of the jig and cut the groove, moving from the back edge of the blank toward the front edge, see Step 1 in Fig. 4.

Shop Note: Since the router bit is turning clockwise, routing this direction actually pushes the router base tight against the fence.

STOP THE DADO. This dado is stopped ¾" from the front edge to keep it from showing on the front edge of the stool. Watch the layout lines and stop when the bit touches the stop line.

SECOND DADO. Next, move the jig down to the dado on the other end and follow the same procedure, see Step 2.

GROOVE. After these two dadoes are routed, turn the jig 90° and clamp it so the edge aligns with the layout line for the groove for the riser, see Step 3. This groove starts in the dado on the left and stops in the dado on the right.

Shop Note: Instead of trying to plunge the bit exactly in the left dado, I plunged the router bit a little ahead (to the right) of the dado. Then I held the router firmly and moved it backwards until it broke into the dado.

BACK RABBET. The last thing is to rout the rabbet for the back panel. Since this rabbet is ¾" wide, and the bit is ½" wide, it has to be routed in two steps.

First, align the edge of the jig with the inside layout line and rout a ½"-wide groove, see Step 4. Then move the jig toward you about ¼" and make another pass to clean out the remaining waste, see Fig. 5.

CUT BLANK IN HALF

After the routing is complete, you can cut the blank in half to create two mirrored side pieces. To do this, start by rough cutting the blank in half with the miter gauge on the table saw.

To get the two side pieces to *exactly the same* finished length, set the rip fence 13¼" from the blade, see Fig. 6. Then cut each piece with the *bottom* edge against the rip fence.

FIGURE 2

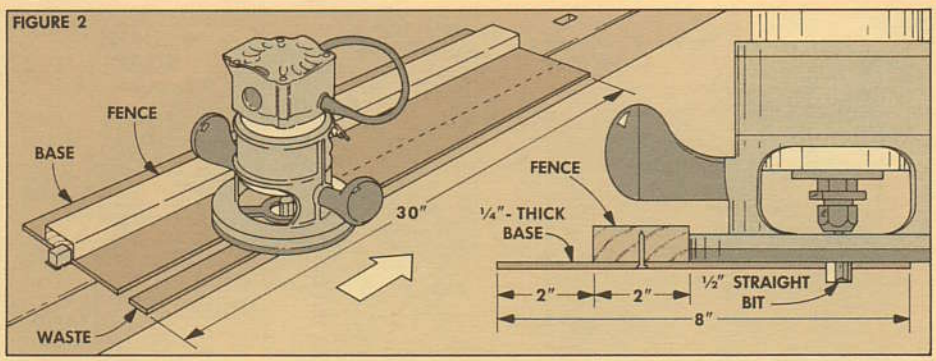

FIGURE 3

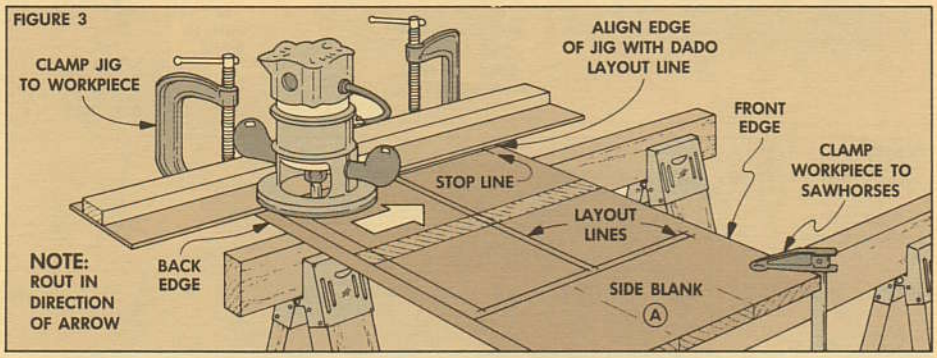

FIGURE 4

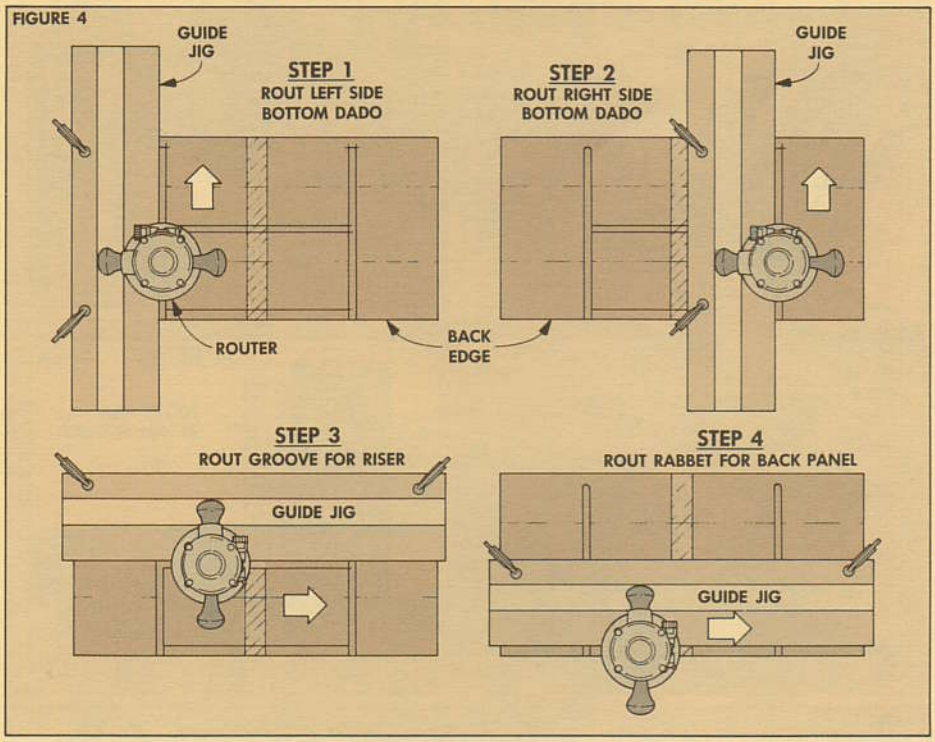

FIGURE 5

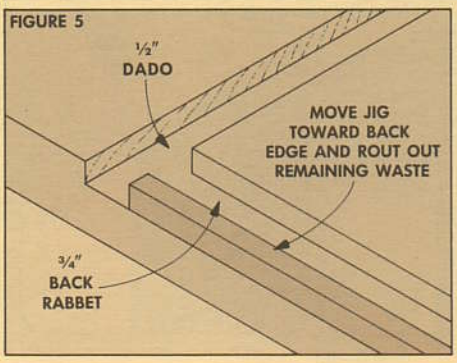

FIGURE 6

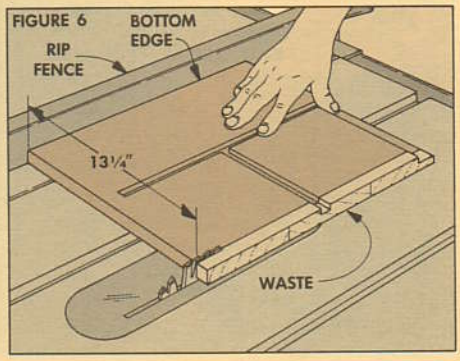

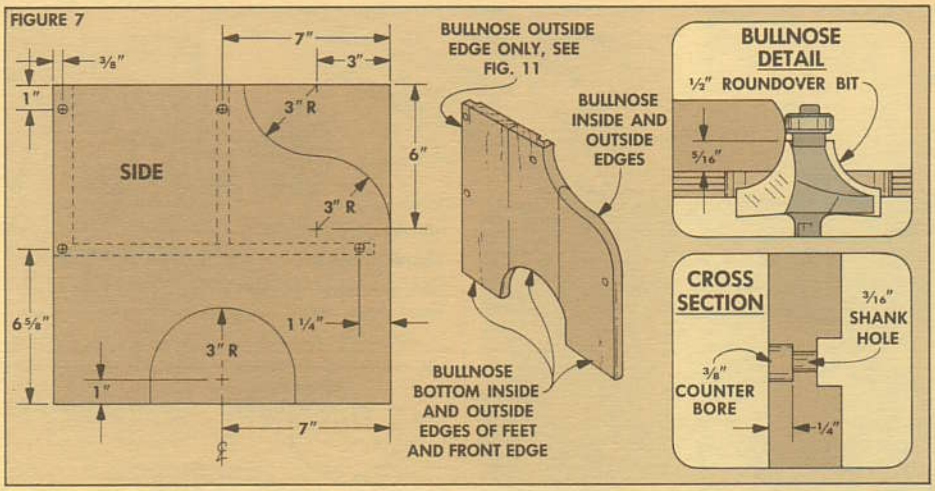

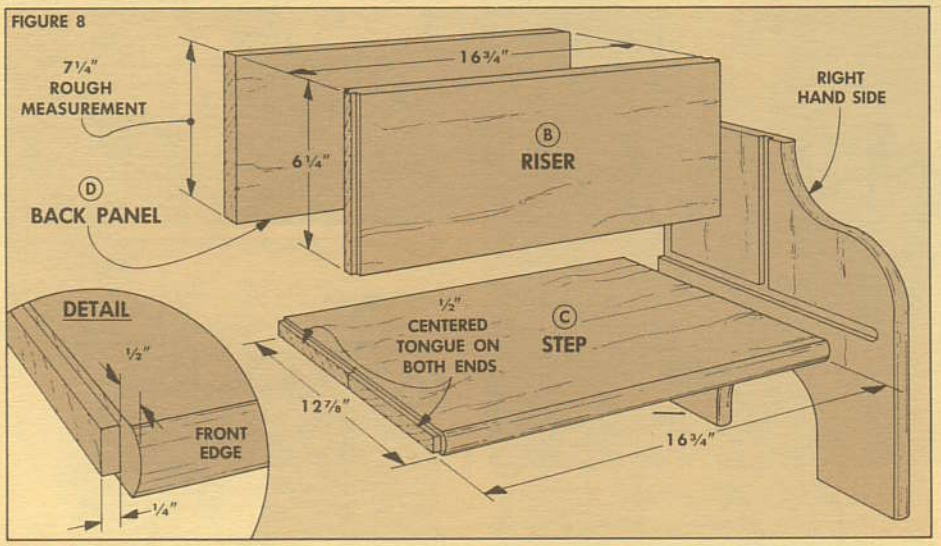

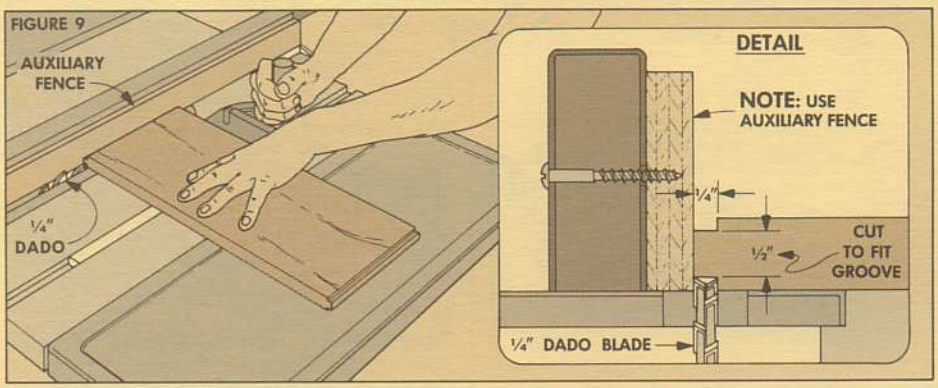

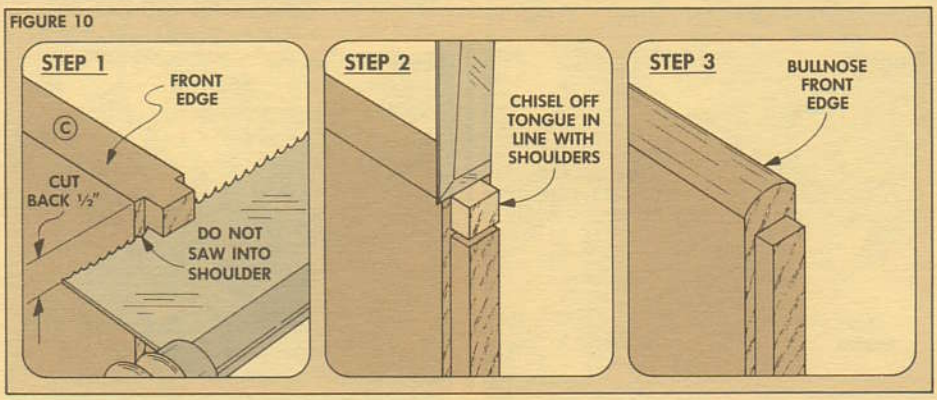

COMPLETE THE SIDES

Now that the two side pieces are to length, the final profiles can be cut. I bandsawed the profile on one of the side pieces and then used that piece to mark the other.

PROFILES. Begin by laying out the arc on the bottom to create the legs, see Fig. 7. Then lay out the two radii on the top front edge (above the step), see Fig. 7.

BULLNOSE PROFILE. After both side pieces are cut to shape, rout a bullnose profile on all of the edges except the top edges and the *inside* of the back edge (the one with the back rabbet), see Bullnose Detail in Fig. 7. (Shop Note: To keep the bearing on the bit from going into the rabbet on the back outside edge, use the router table fence for this cut.)

SCREW HOLES. The stool is held together with glue and counterbored screws. Even though it's assembled later, it's easiest to drill the 3/8" counterbores and the 3/16" shank holes now for the screws in the side pieces, see Cross Section in Fig. 7.

INSIDE PANELS

With the side pieces complete, work can begin on the three inside pieces: the riser (B), the step (C), and the back panel (D).

STEP. I started by edge-gluing two pieces of 3/4" stock to form the first step (C). After it's dry and planed or sanded flat, cut it to a final width of 12 7/8", see Fig. 8. (It's cut to final length later.)

RISER AND BACK PANEL. Next, cut the front riser (B) to width so it matches the length of the vertical groove in the side piece (in my case, 6 1/4" wide). Then cut the back panel (D) to a rough width of 7 1/4". (This will be cut to finished width later, refer to Fig. 11.)

Now cut all three panels (B, C, D) to a uniform length of 16 3/4".

TONGUES. The step (C) and front riser (B) are joined to the sides by cutting rabbets on the ends to form tongues that fit the dadoes and grooves in the side pieces. (I used tongues here for a cleaner appearance. Any variations in the tongue thickness are hidden inside the joint.)

To cut the rabbets, mount a 1/4" dado blade on the saw and raise it 1/8" above the table, see Fig. 9.

Before cutting the panels, check the saw set-up by cutting rabbets on the end of a piece of scrap that's the same thickness. After the tongue on the test board fits the 1/2" groove, cut tongues on both ends of the front riser (B) and step (C).

TRIM BACK TONGUE. The tongue on the front edge of the step (C) has to be trimmed back to fit the stopped dado.

I trimmed the tongue in two steps, see Fig. 10. First, cut the tongue 1/2" from the front edge stopping short of the shoulder, see Step 1. Then chisel down on the front edge to remove the waste, see Step 2.

The final operation on the step is to bullnose the front edge (see Step 3) using the same procedure as on the side panels.

BOTTOM END OF RABBET. There are two more steps before assembly. The bottom end of the rabbet has to be chiseled out so the back panel (D) will align with the bottom of the step (C), see Fig. 12.

After the rabbet is cleaned out, trim the back panel so the top edge aligns with the top of the sides, see Fig. 11.

ASSEMBLY

Once all of the pieces are cut to fit, assembly can begin.

DRILL PILOT HOLES. Start by clamping the pieces together without glue. I put a pipe clamp across the top and another between the arcs in the bottom. (Check that the step fits tight against the back panel.) Then drill pilot holes through the shank holes for No. 8 x 1½" woodscrews.

GLUE AND SCREW. Take the pieces apart and put some glue in the dado, groove, rabbet, and between the riser and step. Then clamp it back together and tighten down the screws. After the glue dried, I plugged the screw holes with ⅜" dowels and trimmed the dowels off flush.

LID

The only thing left is to make the lid (E). Start by edge-gluing two pieces of ¾" pine together. Then cut the lid 1¾" wider than the distance from the front edge of the riser (B) to the back edge of the back panel (D), see Fig. 14. Finally, cut it 1¼" longer than the width of the stool (19").

HINGE MORTISES. The lid is held to the stool with butt hinges, see Fig. 13.

To mount the hinges, I outlined each hinge in the top of the back panel. Then I routed out the majority of the waste and cleaned up to the line with a chisel.

Now screw the hinges into the mortises so the front of the hinge aligns with the inside edge of the back panel. Then center the lid on the top of the stool and mark the location of the hinges on the back edge of the lid, see Overhang Detail in Fig. 14.

Outline this mortise with a chisel so it's 1⅜" from the back edge, see Fig. 13. (This allows the lid to overhang ⅝" off the back, see Detail in Fig. 14.)

After the hinge mortises are cut, rout the bullnose profile on all four edges of the lid. Then screw the hinges in place.

CHAIN. To keep the lid from falling back when it's open, I screwed an 11"-long brass chain to the bottom of the lid, see Fig. 14.

CATCH. I found that I always lifted the stool on the edges of the lid, but it swung down because the front edge wasn't attached. So I mounted an elbow catch on the bottom of the lid and a strike plate on the riser, see Catch Detail in Fig. 14.

FINISH. I finished the step stool with two coats of satin polyurethane varnish.

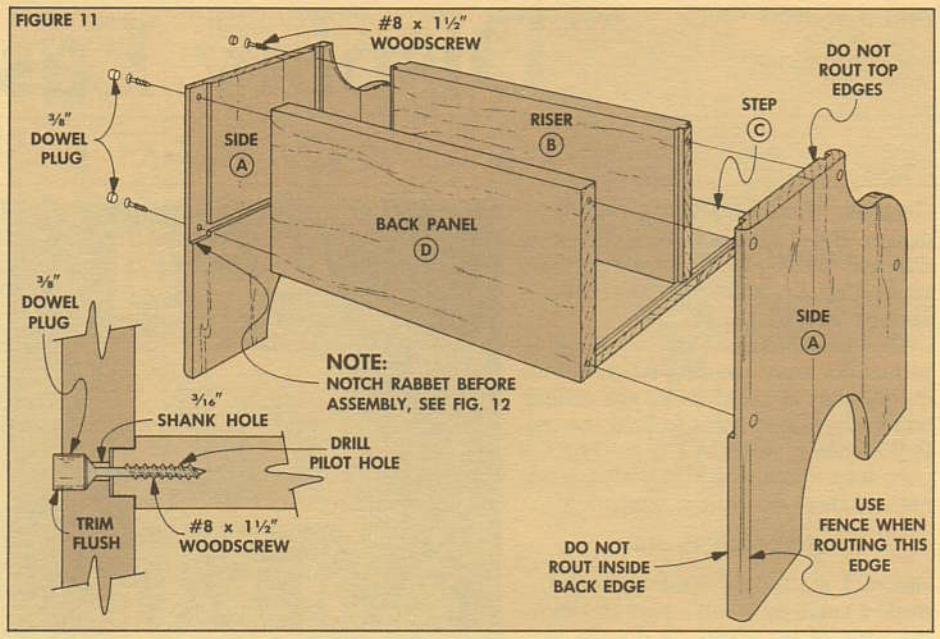

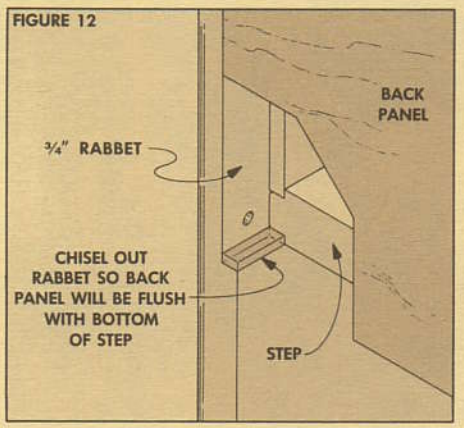

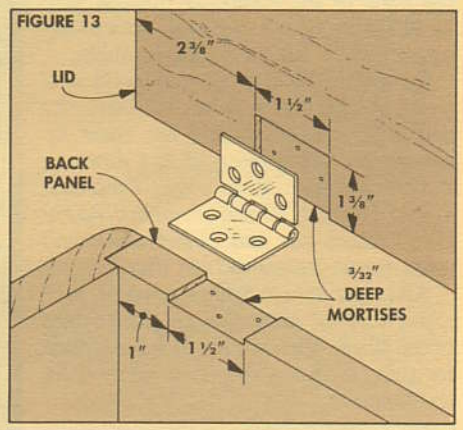

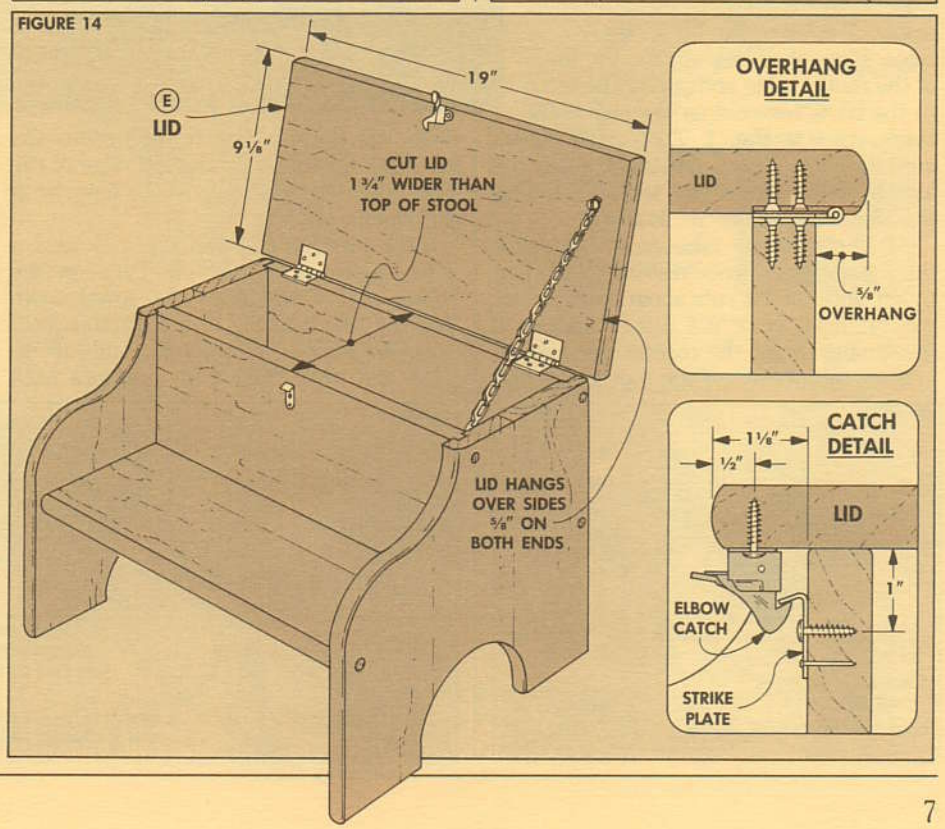

Display Easel

SHOW YOUR ART EASILY

Granted, this easel is very basic in design. But it incorporates a variety of different techniques that make it more interesting to build than the finished product might suggest.

The most unique and challenging techniques were creating round tenons on the ends of the dowels, and drilling uniformly-spaced holes to hold the gallery spindles, refer to Fig. 5. The fun part was making the jigs that made both of these operations easy.

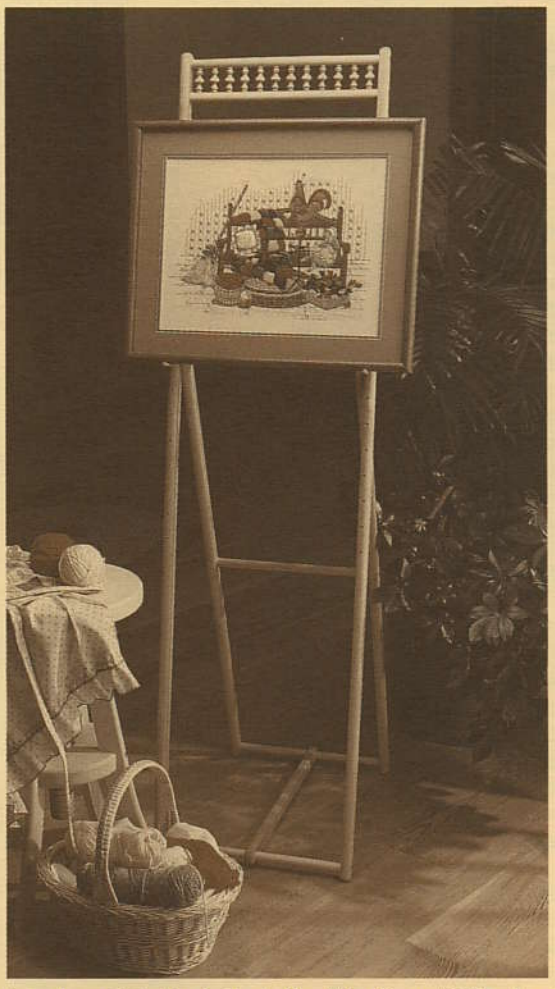

TENNONING JIG

Before I started to make the easel, I made a small jig to cut round tenons on the ends of the stretcher dowels. The jig holds the dowel vertically so a round tenon can be cut on a router table.

To make the jig, all you need is a piece of 2x4 scrap, some ⅛" Masonite and a ⅜" straight router bit. Start by ripping a 6"-long piece of 2x4 down to 2" wide and turn it on edge. Then drill a hole the size of the stretcher dowel (¾") toward one end of the block and centered on its width, see Fig. 1.

After the hole is drilled through, tack a piece of ⅛" Masonite on the bottom of the block. This serves as a base plate for the jig. (Keep the tacks away from the hole.)

SETTING UP. Now, to make a tenon, mount a ⅜" straight bit in the router table. Place the block against the fence of the router table and adjust the fence so the bit is *centered* on the end of the block, refer to Fig. 1. Then raise the bit until its height above the table equals the length of the tenon you want (⅞"), plus the thickness of the ⅛" Masonite.

After the router table is set up, push the jig along the fence moving from right to left until the bit cuts about halfway into the ¾" hole. Now it's just a matter of fine-tuning to get the correct size tenon.

Start by turning off the router and look down into the hole. Adjust the jig until the bit is barely visible on the left edge of the hole. Then clamp the jig to the fence with a C-clamp, see Fig. 2.

TEST CUT. To test the set-up I used a scrap piece of ¾" dowel. Turn on the router and slowly push the dowel down into the hole rotating it in a counterclockwise direction, see Fig. 2. Continue to push and turn using even pressure until the end of the dowel stops against the Masonite base. Then *carefully* pull the dowel out.

MAKE A GAUGE. To check the size of the tenon, make a gauge by drilling a ½"-dia. hole in a piece of scrap. Then try to push the tenon into the hole. (It may be too big to fit.)

If the tenon is too big, move the jig *slightly* to the left, (so more of the bit shows in the hole) then reclamp it. Repeat the procedure, until it fits the ½" hole. Once the jig is set, you can start work on the stretcher dowels.

STRETCHER DOWELS

To build the easel, I started by cutting six stretcher dowels from ¾" birch dowel rods. The four dowels (A) for the upright front frame are 17" long, and the two dowels (B) for the support frame are 15⅜" long, see Fig. 3.

CUT TENONS. Then I used the jig to cut round tenons on both ends of all six dowels. The tenons should be a little longer than the thickness of the frame uprights. (This meant ⅞" long in my case, see Detail in Fig. 3.) I trimmed the tenons flush with the frame pieces after assembly.

LOCKING PIN KERF. After the tenons are cut on both ends of all the stretcher dowels, I cut a shallow kerf around one of the 17"-long dowels. (The bottom stretcher dowel that is attached to the front uprights, refer to Fig. 17.). This kerf helps secure a locking bar in place, refer to Fig. 11 on page 10.

To make the kerf, I marked the center of the length on the dowel, see Fig. 3. Then, adjust the table saw rip fence so the blade is centered on this mark, see Fig. 4.

To cut the kerf, hold the dowel firmly against the miter gauge and push one end against the fence. Then *slowly* roll the dowel to cut a ⅛"-deep kerf all the way around the stretcher dowel.

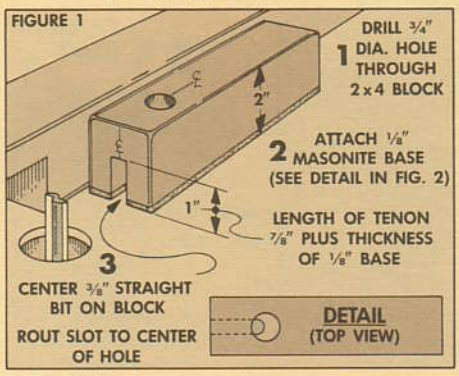

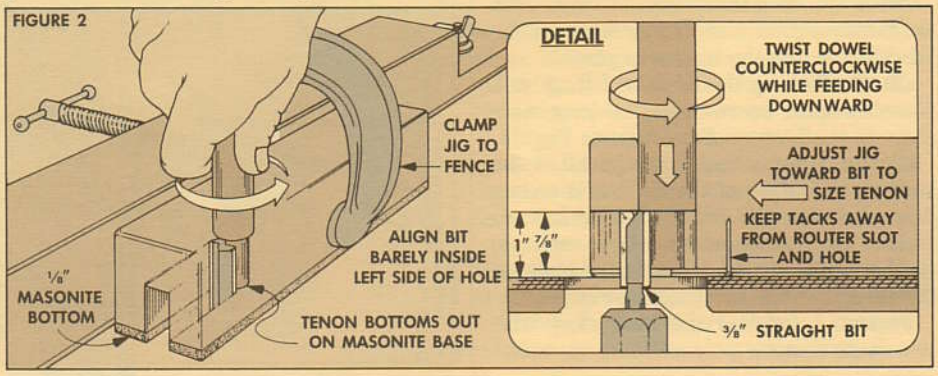

GALLERY RAIL

Two of the 17"-long stretcher dowels are used to make a decorative rail at the top of the easel. These two dowels are held together with 12 decorative "gallery" spindles (C), refer to Fig. 8. (See Sources, page 24.)

DRILLING JIG. Drilling the holes for these spindles was another challenge. To drill these holes, I made a simple centering jig with a couple pieces of ¾" plywood, see Fig 5.

First, cut two ¼"-wide dadoes on the inside face of each plywood piece, see Detail in Fig. 5. Then to hold the two pieces of plywood together, drill a series of holes for 2"-long screws, see Cross Section in Fig. 5.

Now insert the top two stretcher dowels (A) into the jig. (The end grain of the dowels should be vertical. This has to do with the wedges that are added later to the ends of the dowels, refer to Fig. 15.)

Stand the jig on end to make sure the ends of both dowels are flush with the end of the jig. Then gently tighten down all of the screws to secure both dowels in the dadoes between the two plywood pieces.

LAY OUT HOLES. To make sure the holes are spaced evenly, I marked reference lines 1¼" apart on the top of the jig, see Fig. 5. Use a square to continue these reference lines on the side and bottom of the jig so the holes in the bottom dowel are aligned the same, see Fig. 5.

REFERENCE LINES. After marking all of the reference lines, draw a centerline down the length of the dowel. This can be difficult, so I used a little centering trick.

Set the end of a combination square so it's *intentionally* just short of the middle of the dowel and make a reference mark. Then flip the combination square over against the other side of the jig and make a second reference mark, see Fig. 6. Now it's easy to spot the centerpoint halfway between these two reference marks.

DRILL HOLES. To drill the holes into the dowels, I used a ⅜"-dia. brad-point drill bit. (The brad point keeps the bit from walking off the side of the dowel.)

After mounting the bit in the drill press, I also marked the centerpoint of the bit on the fence. This mark is used as an index line for the marks on the jig, see Fig. 7.

Shop Note: If you don't have a drill press fence, clamp a straight piece of 2x4 on the drill press table, then mark an index line.

Now drill the holes, 5/16" deep at each centerpoint aligning the index line on the fence with the reference lines on the jig. After drilling the top dowel, flip the jig over and drill the bottom dowel.

ASSEMBLY. After drilling, I assembled the gallery rail by gluing the spindles into both of the dowels, refer to Fig. 8.

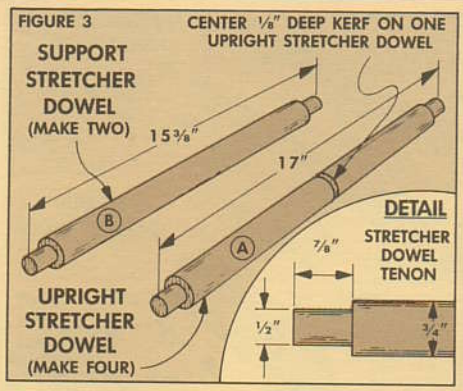

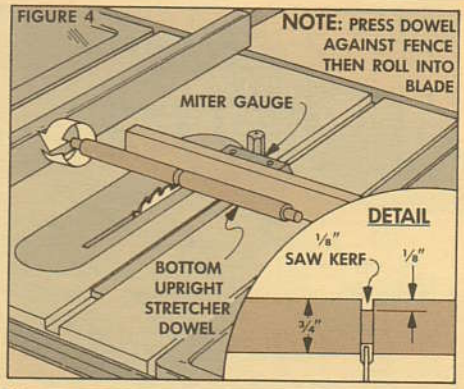

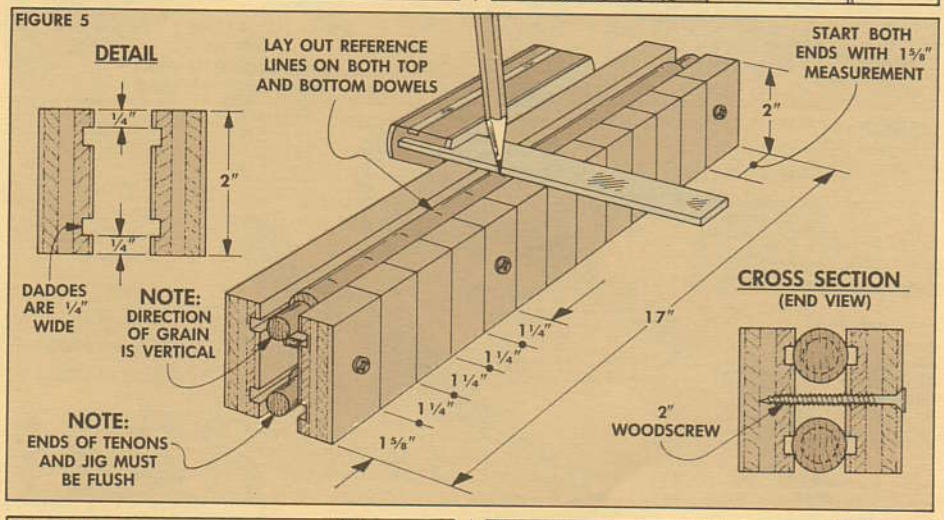

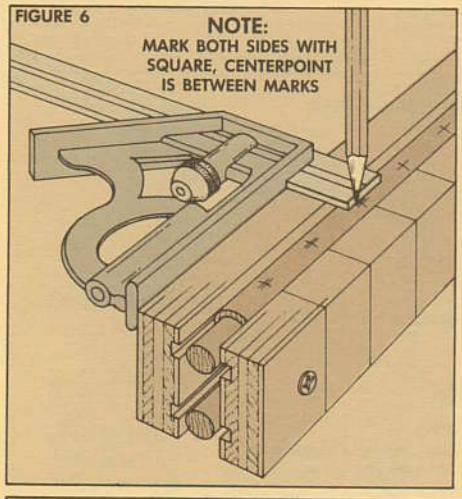

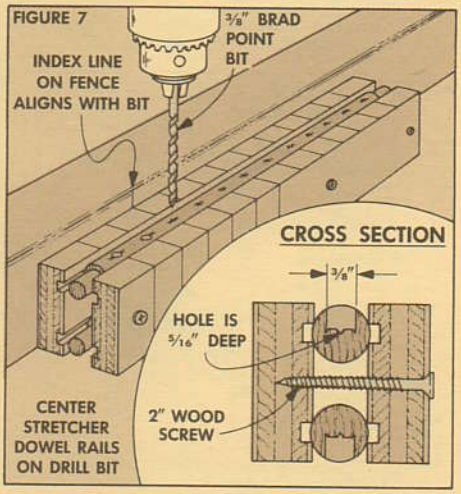

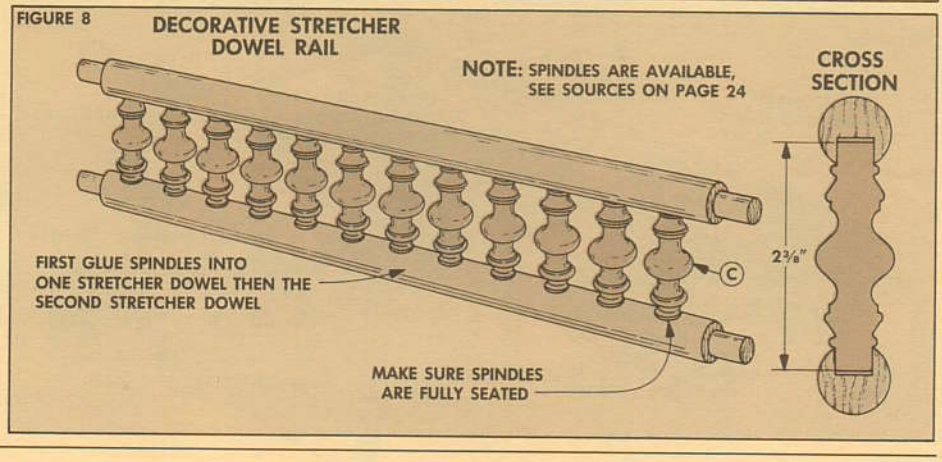

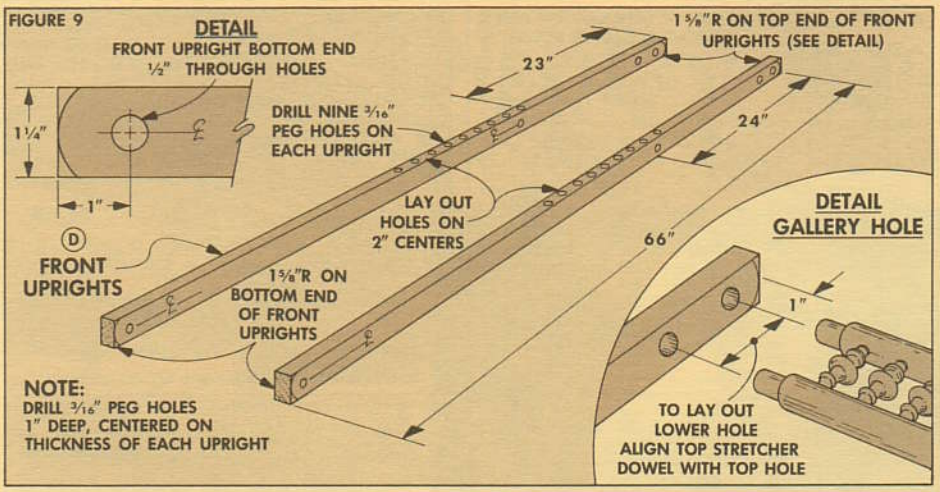

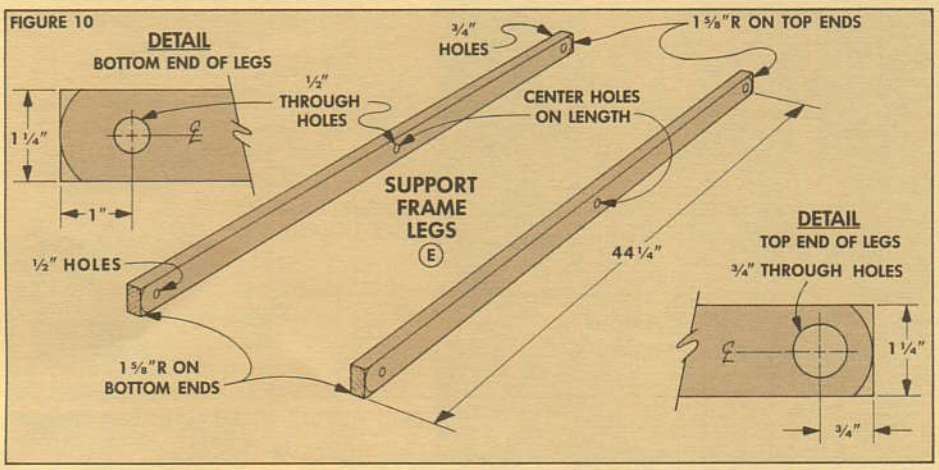

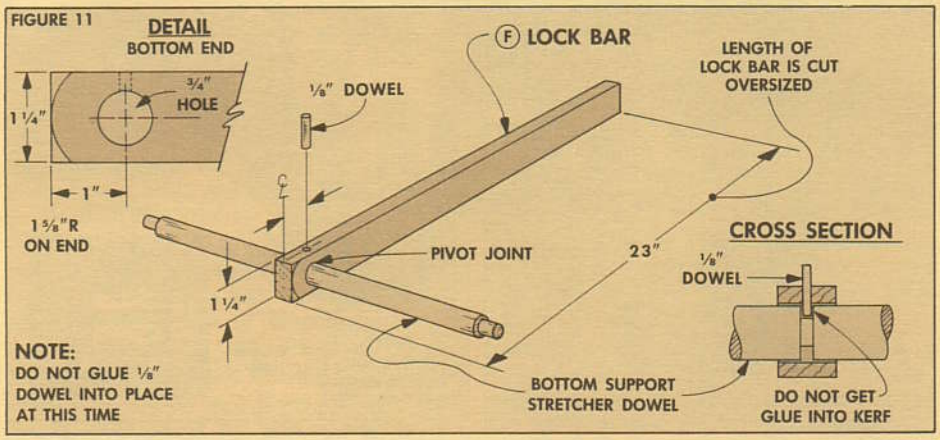

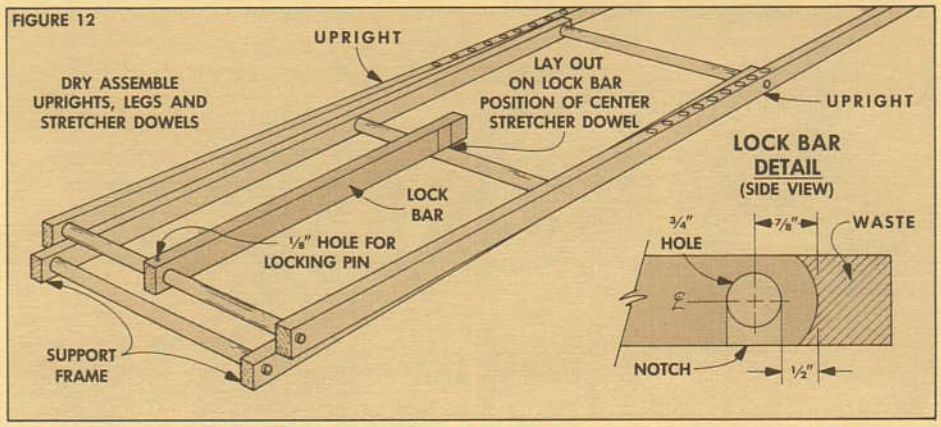

THE FRAME UPRIGHTS

After the round tenons are cut on the ends of the stretcher dowels, work can begin on the long upright pieces for the easel frame. To make the front uprights (D), I ripped 4/4 stock (13/16" actual thickness) 1¼" wide by 66" long, see Fig. 9.

DRILL HOLES. These upright pieces are joined together to the stretcher dowels by drilling four ½"-dia. holes in each upright. Two of the dowel holes are centered and 1" from each end, see Detail in Fig. 9. Another hole is located 24" from the top end of each upright.

There is one more hole near the top of each upright for the bottom dowel of the gallery rail. To locate this hole, measure the distance between the tenons on the assembled gallery rail, see Detail in Fig. 9. Now drill the eight holes on both front uprights, see Fig. 9.

PEG HOLES. The picture/art frames placed on the easel are supported by "tie pegs." (See Sources, page 24.) Drill a series of holes on the front edge of the front uprights for these pegs, see Fig. 9.

SUPPORT FRAME. The same basic procedure is followed to make the two legs (E) for the support frame. These two legs are cut 1¼" wide by 44¼" long, see Fig. 10. Then mark the centerpoints for the holes at the ends.

There's one change though. The holes at the top ends of these legs are ¾" diameter (the full diameter of the dowel) instead of ½" diameter. This way the middle dowel can slide all the way through this hole, so the tenon fits into the front upright, refer to Detail in Fig. 17.

After the ¾"-dia. top holes are drilled, drill the remaining four ½"-dia. holes for the other two dowels, see Fig. 10.

LOCK BAR

These two frames are connected with a lock bar (F), see Fig. 11. The length of the lock bar is the key to the angle of the easel.

During the design phase, we determined the length to get an 11° angle for the easel. This length also determined the position of the middle stretcher dowel on the support frame. (When the easel is folded down, the lock bar fits over the middle dowel, see Fig. 12.)

Since this distance has already been determined, the reverse procedure is used to cut the lock bar to length. That is, cut the lock bar to a rough length of 23", see Fig. 11. Then drill a ¾"-dia. hole centered 1" from one end, see Detail in Fig. 11. Now, insert the bottom dowel (the one with the lock bar kerf) through this hole.

To keep the lock bar from *walking*, I drilled a ⅛"-dia. hole in the top edge. Later a ⅛" locking pin dowel is inserted through this hole and into the kerf cut in the bottom dowel.

MARK NOTCH. Temporarily assemble the easel, as shown in Fig. 12. Then mark the position of the notch so it will fit over the middle dowel. After these marks are made, cut off the end of the lock bar ½" beyond the mark, see Detail in Fig. 12.

ROUND ENDS. Before actually cutting the notch, I rounded the ends of the lock bar. This is also done on both ends of the uprights (D) and legs (E). Mark a radius of 1⅝" on both ends of all five pieces. Then cut the radius to shape on a bandsaw.

ROUND EDGES. Next, round over the edges of all five pieces. I did this with a ½" round-over bit set 5/16" high to create a modified bullnose look, see Fig. 13.

CUT NOTCH. Now the notch can be cut out, see Detail in Fig. 12.

WEDGED TENON

All of these pieces are assembled by gluing the round tenons in the holes of the uprights. To strengthen this joint, I cut kerfs on the ends of the tenons and tapped in wedges, see Fig. 15.

KERF JIG. To cut the kerfs, I made a simple jig. Drill a ½"-dia. hole at one end of a piece of scrap, see Fig. 14. Then cut a 4"-long kerf down the length of the scrap. (This creates a "pincher" effect on the end of the scrap.) Now cut a kerf into the jig *across* the middle of the hole.

CUT KERFS. Place a round tenon in the hole in the jig and clamp the jig in a vise, see Fig. 14. Then saw a ½"-deep kerf in the end of the tenon.

CUT WEDGES. Now the wedges can be made. Set the rip fence on the table saw to cut a strip equal to the thickness of the kerf in the end of the round tenons, see Step 1 in Fig. 16.

Then reset the fence to rip strips ½" wide (the diameter of the round tenons), see Step 2. Next, cut ¾"-long pieces off these strips and sand the ends to a point, see Detail in Fig. 16.

ASSEMBLY

Finally, the frames can be assembled. I started with the support frame. Glue the middle and bottom dowels between the two support legs (E). Then slide the top dowel through the top holes.

The front frame is assembled by first sliding the lock bar (F) over the bottom stretcher dowel. Then glue in the ⅛" locking pin, see Cross Section in Fig. 11. Now glue the ends of the bottom dowel as well as the middle and the top gallery rail between the two front uprights (D).

When the frames are glued together, use a toothpick to put a little glue in the kerfs, and push the wedges in place. Let the glue dry, then cut the ends off and sand them flush with the surface.

FINISH. When everything is assembled, I sanded the easel frame smooth and applied two coats of tung oil varnish.

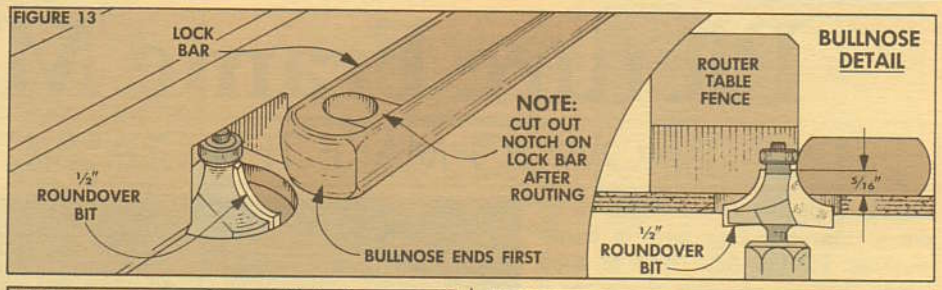

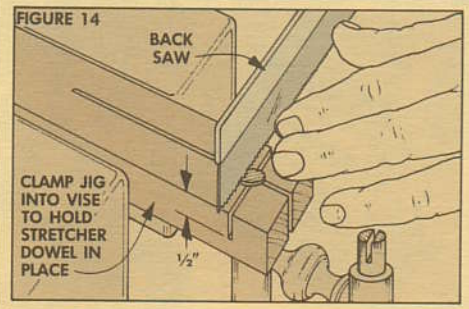

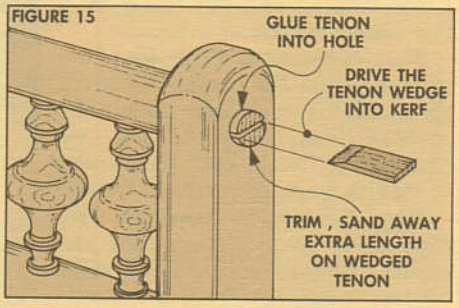

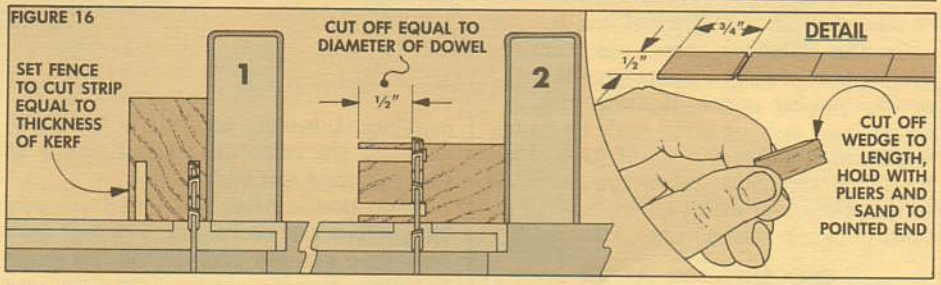

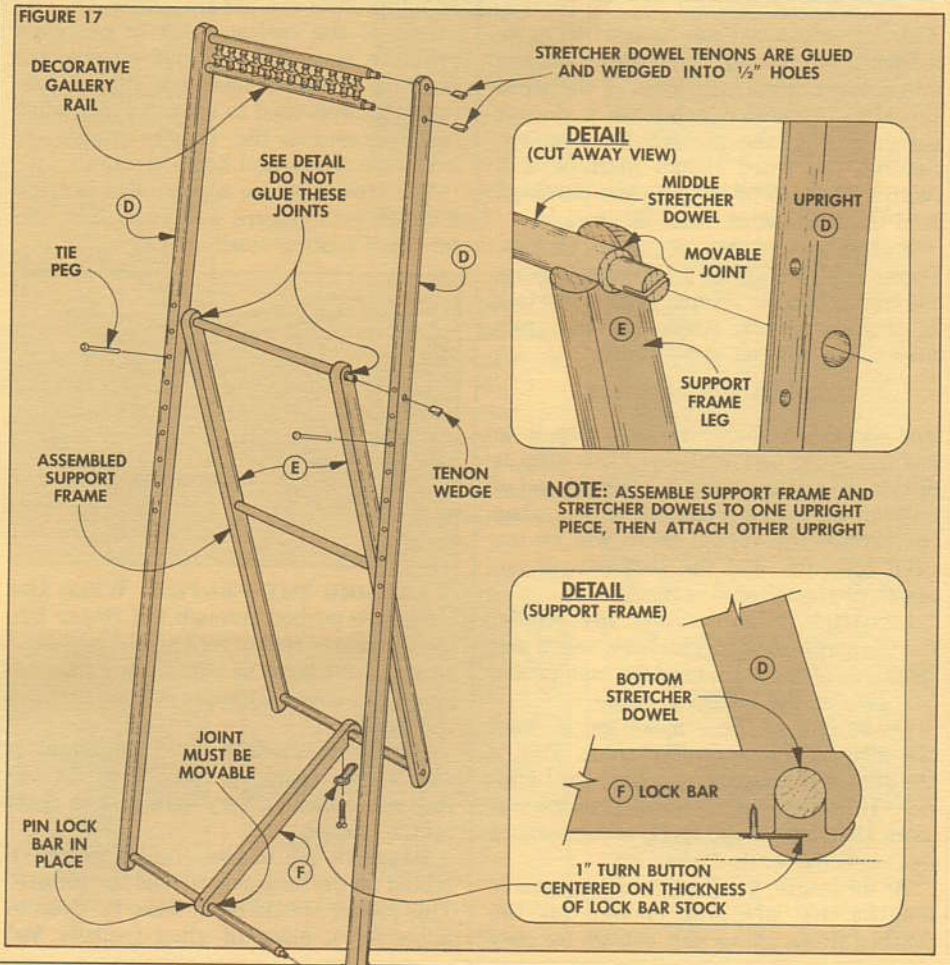

Picture Frame Moldings

HOW TO MAKE TEN CLASSIC PROFILES

Making a picture frame ought to be one of the easiest projects in woodworking. It's just four strips of wood joined with miters. But there are a few considerations.

First, of course, is the profile of the molded pieces. The easiest way to cut the profiles is on a router table using standard router bits. At first, we thought this would limit the variety of profiles we could produce. Wrong.

Very quickly we came up with about three dozen profiles using just eight standard router bits. (See Sources, page 24.) There are dozens of other options once you get into it.

On the following pages, are ten profiles that are just a sampling of the profiles you can create. It starts with a very basic molding that's made by rounding the front edges of strips of stock. Then we added variations. When you get down to it, all of these moldings are just variations of simple router cuts.

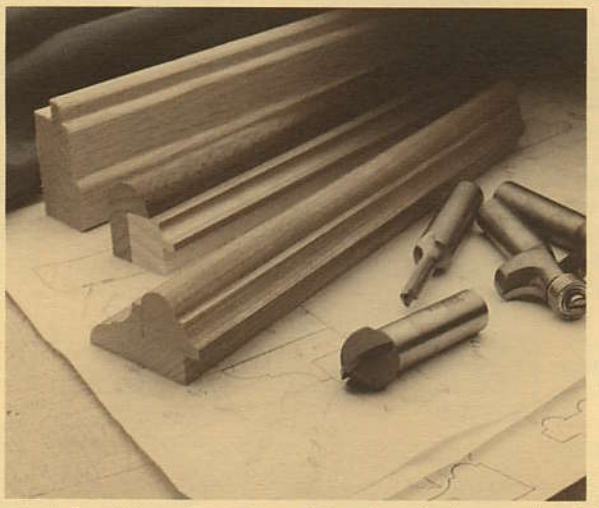

CHOOSING THE WOOD

Although any wood can be used to make a frame, we generally took three criteria into account. First, the grain of the wood should be somewhat subtle so it doesn't compete with the picture it's framing. Second, the wood should machine well (with a minimum of chipping and burning). And third, the stock must be *straight*.

Walnut and cherry are good choices. Poplar is a good choice if you plan to paint the frame. (Poplar accepts paint well.) Oak is okay on narrow strips, but the grain may be too wild on wider strips.

CUTTING THE PROFILES

For all the moldings, the first step is to cut the stock to initial size. This step is critical. The strips must be straight and of uniform width and thickness. If not, when the profiles are routed there will be uneven contours, and the profiles will not match at the mitered corners.

LENGTHS. Before routing any profile, cut the strips to size. The basic width and thickness of the stock used for each profile is shown on the following pages.

On several of these moldings, at least one strip is shown as 13/16" thick. This is the standard thickness for hardwood lumber. However, all of these profiles will work the same if the stock is somewhere between 3/4" and 13/16".

As for length, you just need manageable lengths that are long enough for the finished frame pieces plus enough for easy handling. I usually add a few inches to allow for the snipe (divot) that occurs at the beginning and end of cuts.

HOLD DOWN. After the strips are cut, the profiles can be routed. The key here is to keep uniform pressure on the strips so the profiles are always consistent.

One of the easiest ways to get even pressure is to use a grout trowel, see drawing below. (These are rubber bottomed trowels used to smooth grout when installing ceramic tile. They're available at hardware stores and home centers.)

The trowel is also a good idea because it keeps your fingers well away from the bit when routing small strips.

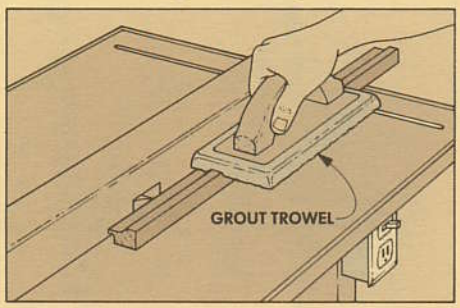

ROUTING THE PROFILE. When the strips are pushed through the router bit, use a constant rate of feed and be prepared so you don't have to stop at any time. A pause can create a dimple or burn mark in the profile.

If a profile is a deep one, I usually make one or two roughing cuts. Then for the final cut, I make a very light pass to clean up the surface.

RABBETS. All of the profiles include a rabbet on the back side to hold the picture. This rabbet should be at least 1/4" deep to allow for a piece of glass (usually 3/32" thick), a mat (if needed), the photo or print itself, and the backing material. (If you need a deeper rabbet for an oil painting or a piece of needlepoint that's mounted to a stretcher frame, see the alternative method in Talking Shop, page 22.)

CUTTING RABBETS. Rabbets can be cut a variety of ways. We're showing them being cut on a router table with a straight bit. This works fine, except for chipout.

When a straight bit is used, the two sides of the rabbet are cut in one pass. The side that's cut by the top of the bit tends to chip out. This wouldn't be a problem except this is usually the corner that faces the picture and is visible from the front of the frame.

To avoid this chipout, there's a trick to cutting rabbets on the router table. Make a light first pass *backwards*, see Step 3 at the top of the next page. Set up the router table to cut a narrow rabbet (full depth, but only about 1/16" wide). Then push the strip through the bit working from left to right (rather than the usual procedure of right to left).

When using this method, the bit has a tendency to grab the workpiece and pull it forward, so keep your hands out of the way and use the grout trowel. This backward cut will produce a clean shoulder. Then complete the rabbet by making another pass at full width.

GROOVES AND INLAYS. One more tip. Some of the profiles have inlay strips set into grooves to add to the profile. It's very difficult to get an exact fit of the strip into the groove. (Both the strip and the groove would have to be cut perfectly.)

To get around this problem, cut the groove as normal, but cut the strip just a tiny bit wider than the groove. (It should fit in, but very snugly.) Then very gently taper the sides of the strip so it wedges into the groove. This taper can be made with one or two passes with a block plane or a hand scraper.

The tapered sides of the strip will wedge tight against the edges of the groove. Just don't make it too tight or it will split the molding. And, you want it to "bottom out" in the groove so it doesn't have "waves."

THE MOLDINGS. On the next five pages we're showing a variety of profiles. The first page shows a simple rounded profile with two options. Then there are four profiles suitable for larger frames. And finally, three profiles that could be used with 5x7 or 8x10 photos.

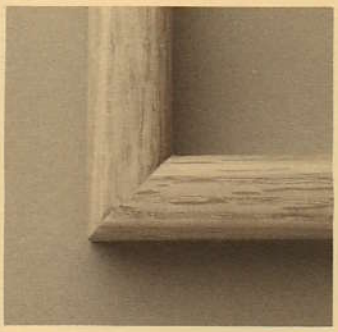

This frame is a popular design because of it's basic, uncluttered look. It's also a good starting for many variations. In this example, the molding begins as a strip of stock 13/16" square. But it can be 3/4" square, or 1/2" square for very small frames.

The profile is made by rounding over two edges with a 1/4" round-over bit, Steps 1 and 2. Then a rabbet is cut to hold the picture and glass. To prevent chipout, cut the rabbet in two passes. First, make a *backwards* cut (refer to text at left) only 1/16" wide. Then make a full cut 1/4" wide to complete the rabbet.

VARIATION. We also made a wider version with two 1/8" grooves (Steps 5 and 6) and inserted contrasting strips of wood.

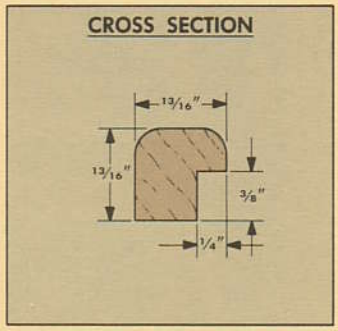

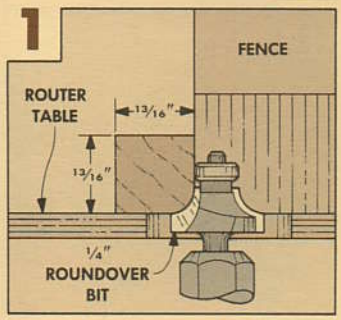

Cut stock to size. Round one edge with 1/4" round-over bit.

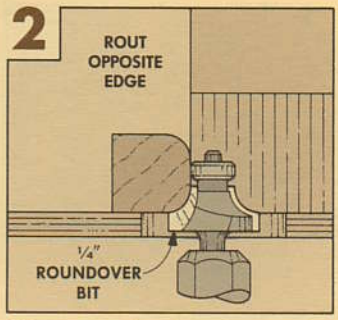

Then round other front edge with 1/4" round-over bit.

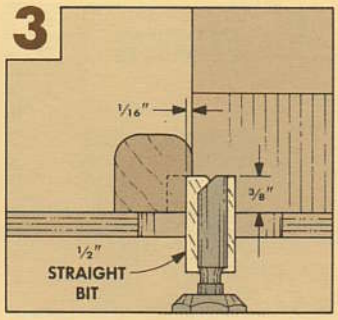

First pass for rabbet is a light "backwards" cut (see text).

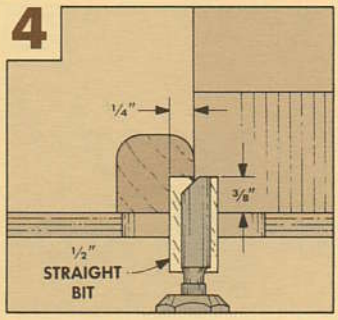

Complete rabbet by routing to full width with straight bit.

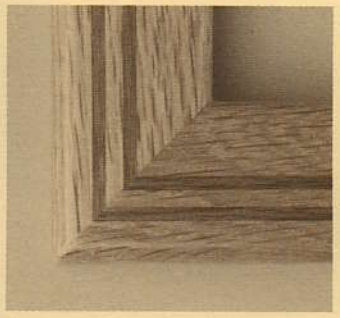

Variation: *Same as frame above except wider with inlay.*

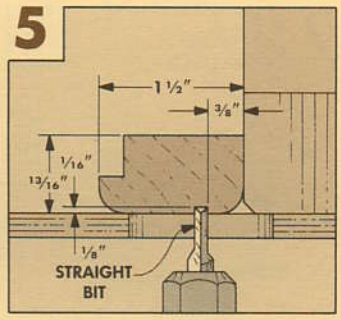

Cut stock as in Steps 1 to 4. Then rout 1/8"-wide groove.

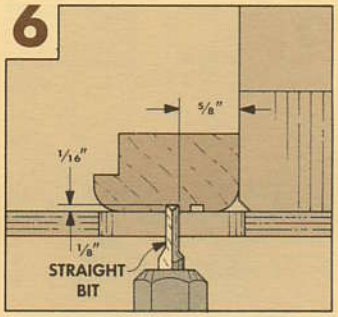

Cut second groove and inlay with contrasting wood.

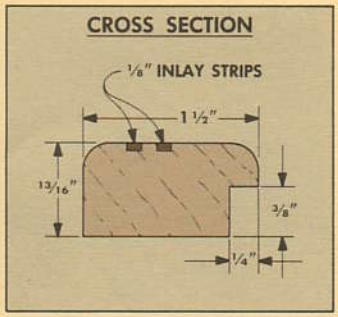

Cross Section: *Stock is cut wider and inlays are added.*

By cutting several strips and gluing them together, you can create all types of variations. This one starts with the same profile shown at the top of this page, except it's 1 1/16" high. The edges are rounded and a rabbet is cut to accept a second piece of stock, see Step 1. (Second piece can be 3/4" thick instead of 13/16".)

To make the second piece, round over the front corner, see Step 2. Then cut a groove with a 1/4" straight bit to accept a third strip, see Step 3. The third strip is cut about 1" wide so it's easier to handle. Round one edge and then trim it down to a 1/2" width, see Step 4. Finally, glue all three pieces together. For variations, make the third strip out of a contrasting wood, or paint it.

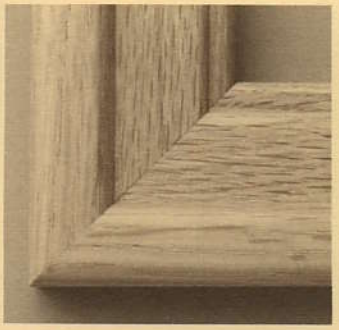

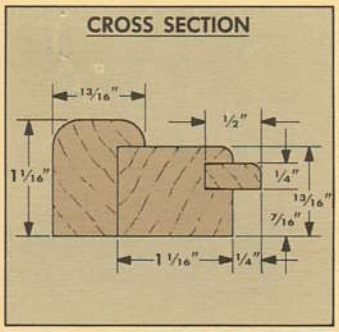

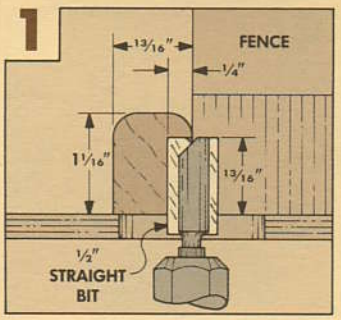

Cut first strip 1 1/16" high. Round edges and cut rabbet.

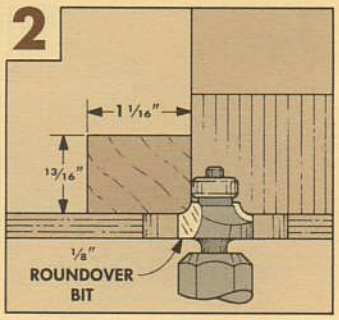

Cut second strip to fit rabbet and round one edge.

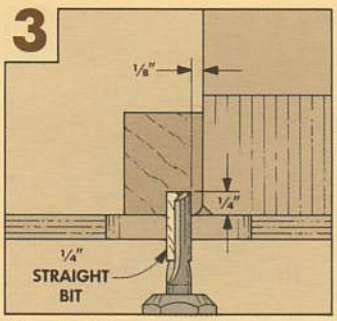

Rout 1/4" groove in second strip to accept third strip.

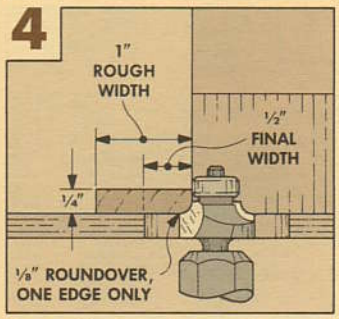

Cut third strip and round edge. Then trim to 1/2" wide.

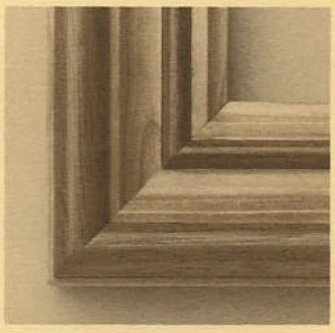

Although it looks complex, this molding is relatively easy to make and yields a dramatic frame. It starts out as a strip 1¾" wide by 13/16" (or ¾") thick (we used cherry), see Cross Section at right. Then ¼" and ½" grooves are routed for half-round inlay strips, Steps 1 and 2. After the grooves are routed, use a ¾" core box bit to cut a wide cove, making multiple passes to extend it out to the edge of the strip, Step 3. To complete the profile, switch to a ½" core box bit on the inside edge, Step 4.

Before adding the inlay strips, cut a rabbet to hold the artwork and glass, Step 5. Then cut two strips (we used walnut), round the edges, and cut off to form the half-round inlay strips.

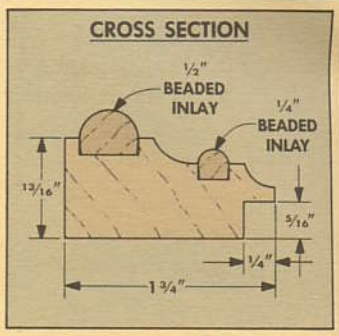

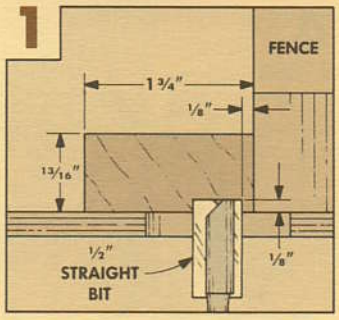

Cut stock to size. Rout ½"-groove for half-round inlay.

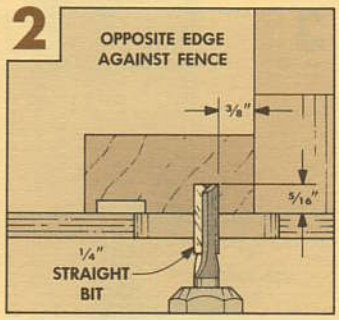

Rout ¼" groove for second inlay. Note depth of groove.

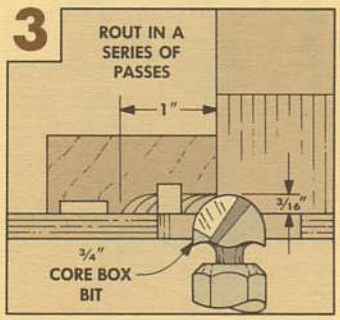

Make repeated passes with core box bit to cut cove to edge.

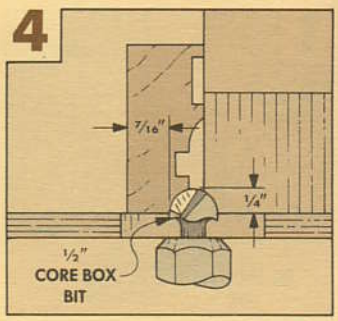

Complete profile by routing ¼" cove on edge of stock.

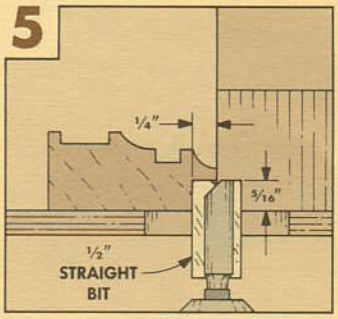

Cut rabbet with straight bit to accept picture and glass.

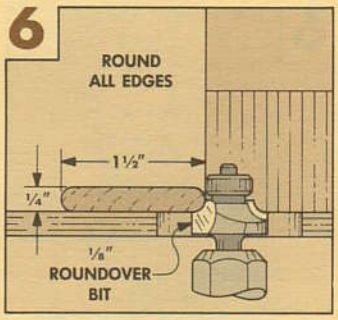

Rip inlay strip to size and round over both edges.

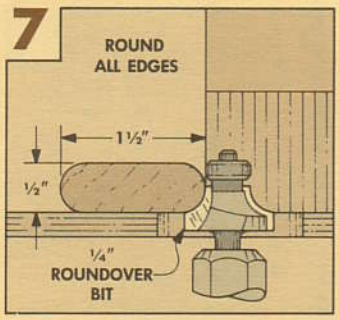

Large strip is made the same way on the router table.

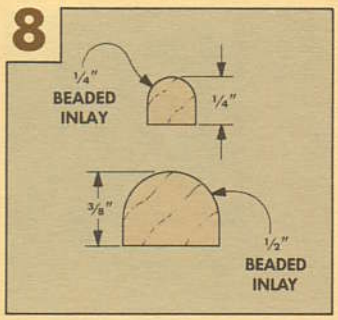

Cut a half-round strip off both edges and glue into grooves.

If you want to add color to a frame, paint one of the strips. We painted the inside strip on this molding with gold leaf paint to highlight the inside edge.

This molding is made by joining two strips. The outside strip starts out 13/16" (or ¾") thick by 1 3/16" wide. (We used walnut for this strip.) Then the edges are rounded with a ⅜" round-over bit, (Step 1), and a rabbet is cut to hold the second strip, Step 2.

For the second strip we used poplar (which accepts paint well). This strip is cut square to fit the rabbet on the first strip. Then a ¼" cove is cut on one corner, Step 3. Finally, a rabbet is cut in it to hold the picture and glass, Step 4.

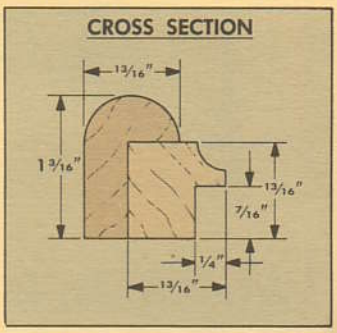

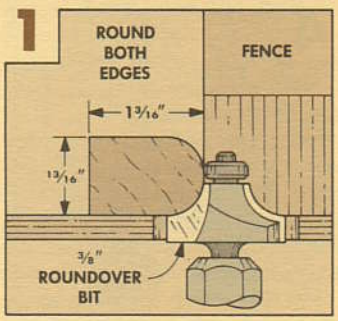

Round over both edges of strip with ⅜" round-over bit.

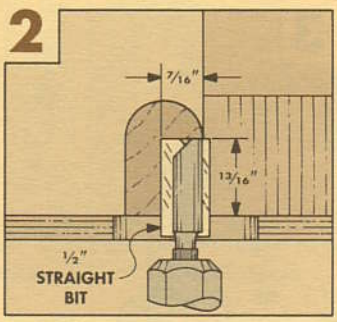

Cut rabbet on first strip to hold second strip in place.

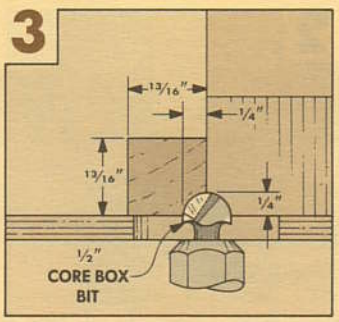

Second strip is cut square and has ¼" cove on one corner.

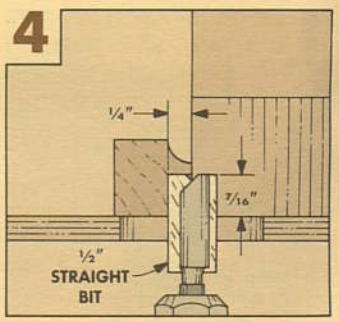

Rabbet is cut to hold picture. Then strip is painted gold.

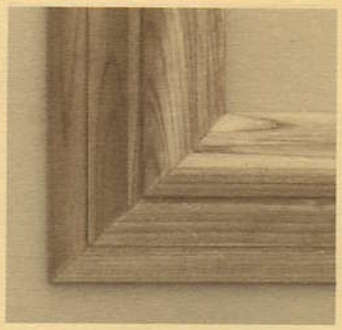

Usually frames have a profile that tapers down to the picture on the inside edge. This one takes the opposite approach. The profile steps up from the outside edge to create something like a shadow-box. Again, this molding is made with two strips.

The outside strip starts with a ¾" flute, Step 1. Then a ⅜" round-over bit is used to create an ogee curve with a shoulder, Step 2. To mount the second piece a groove is cut (Step 3), and then the outside edge is cut off to create a rabbet, Step 4.

The second strip starts with a ½" flute, Step 5. Then use a ¼" round-over to make the ogee profile (Step 6) and round over the top edge, Step 7. Finally, trim the strip to fit the rabbet.

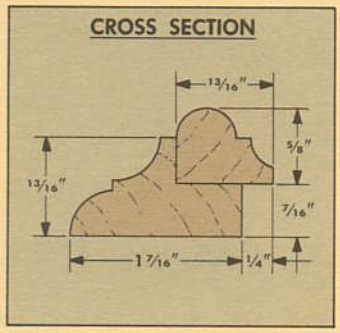

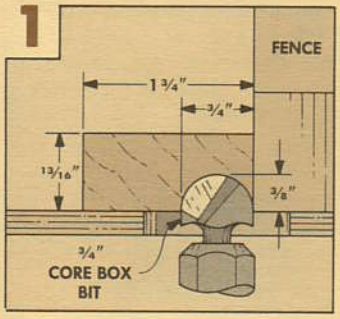

Cut a ¾" flute along the outside edge of the first strip.

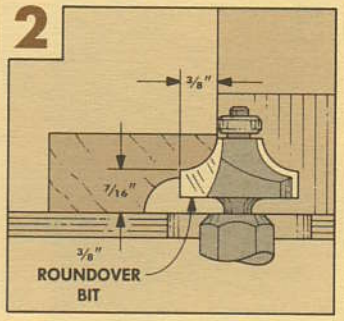

Then use a ⅜" round-over bit to create an ogee profile.

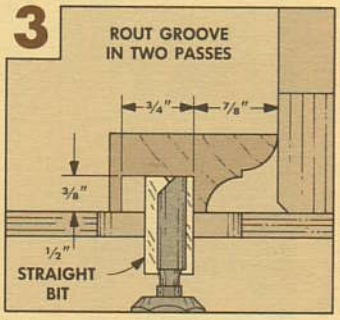

Use a straight bit to rout a groove to hold second strip.

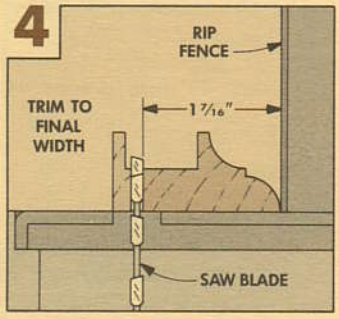

Cut off the edge of strip to create rabbet on inside edge.

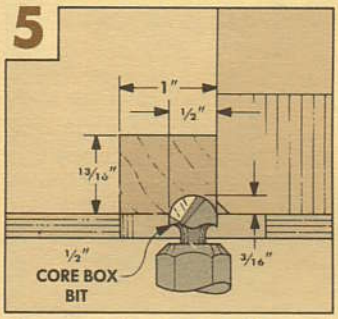

Second strip starts with a ½" flute on the edge of strip.

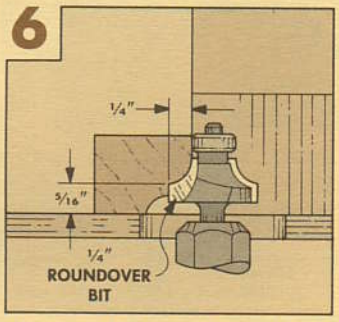

Then a ¼" round-over bit is used to create an ogee profile.

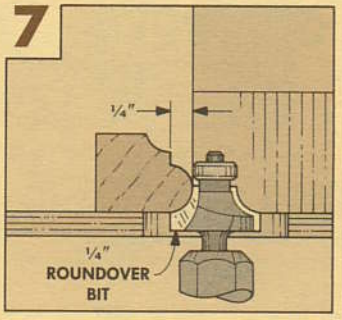

To complete the second strip, round over the top edge.

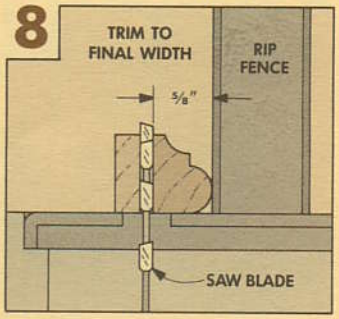

Finally, trim strip down to fit rabbet, and glue in place.

One way to create a smooth contemporary look is to round over all the edges to let the pieces flow together. This frame is really a variation of the frame shown at the top of page 13, except with a coved piece added to widen the whole frame. The extra width is nicer for larger prints or artwork.

Once again, this molding starts by rounding over both edges of the strip, Step 1. Then cut a 13/16" (or ¾") rabbet to accept the second strip, Step 2. To make the wide cove in the second strip, use a ¾" core box bit and make successive passes to widen the cove out to the edge of the strip, Step 3. Finally, rout a rabbet to accept the picture and glass, Step 4.

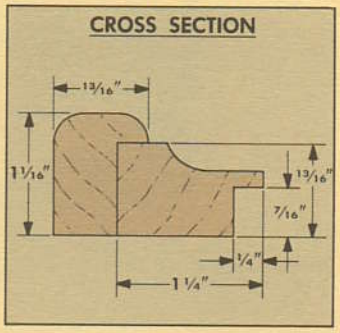

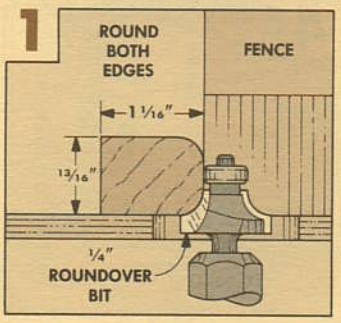

Rout both edges of first strip with ¼" round-over bit.

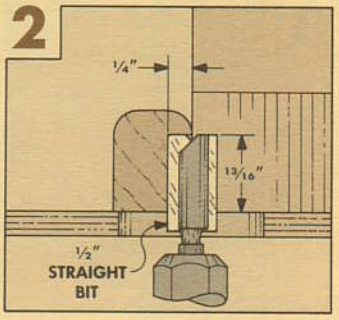

Then cut a 13/16" (or ¾") rabbet to accept second strip.

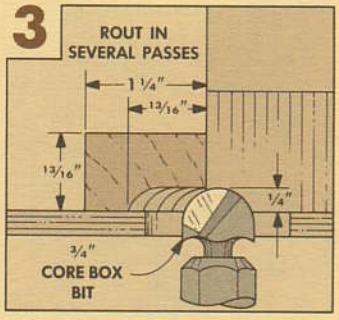

Second strip has wide cove made with successive passes.

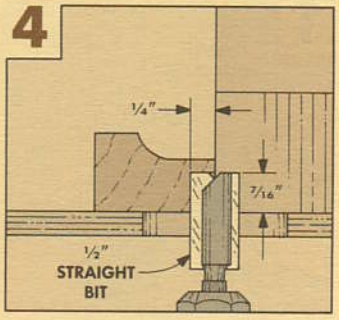

Second strip is completed by cutting rabbet for picture.

The three frames shown on this page are designed for small frames (8x10 or smaller). The first one starts out as a square strip. (We're showing 13/16" square, but it could be 3/4" or even smaller for small photos.) Use a 1/8" round-over bit to round both edges leaving a 1/8" shoulder, Step 1. To create the double round effect, make another pass on both edges with the 1/8" round-over bit, Steps 2 and 3. Then cut the rabbet for the photo, Step 4.

VARIATION. The same basic frame takes on a very traditional look by adding a burl veneer to one edge of the strip (which adds about 1/32" to the height of the strip). Then round the edges with a 1/8" round-over bit, leaving a 1/16" shoulder, Step 5.

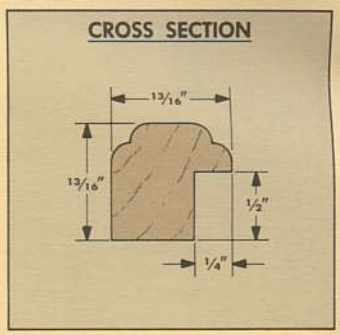

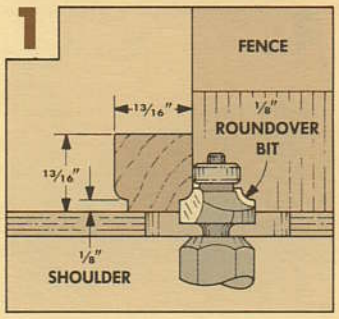

Round edges with 1/8" round-over, leaving 1/8" shoulder.

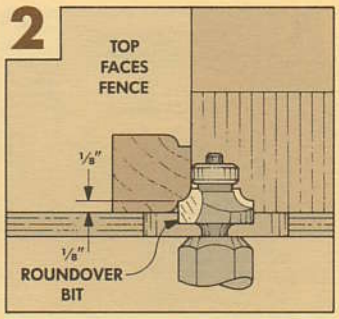

Rotate strip 90° and round over shoulder with same bit.

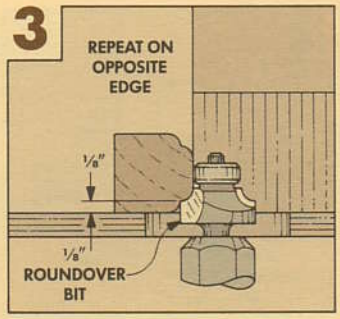

Rotate strip to other edge and round over other shoulder.

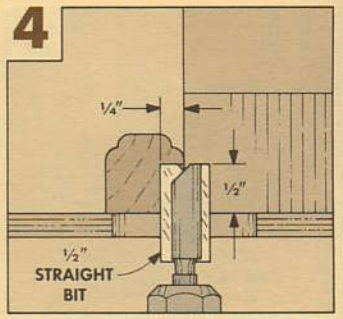

Cut rabbet on back edge to accept photo and glass.

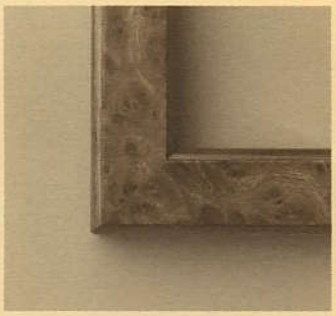

Variation: *Add burl veneer to strip and round edges.*

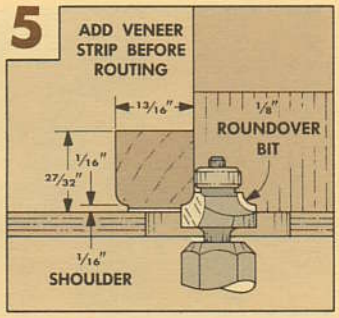

Use 1/8" round-over on both edges, leaving 1/16" shoulder.

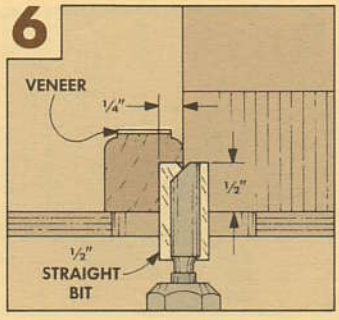

Complete strip by routing rabbet on back edge.

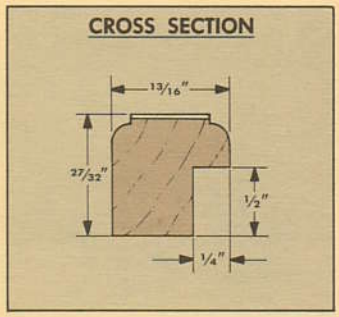

Cross Section: *Burl veneer adds about 1/16" to thickness.*

Even on small frames you can add a second strip that's painted or is made from a contrasting wood. In this case, the first strip is only 1/2" wide, see Cross Section at right. Then both top edges are rounded with a 1/4" round-over bit, Step 1. To add the second strip, a groove is routed with a 1/4" straight bit, Step 2.

To make the second strip, rip a strip 1/4" thick by about 1" wide, Step 3. Then use a 1/2" core box bit to rout a small cove on the edge, leaving a 1/16" shoulder above the cove. Finally, trim this strip down to 3/8" wide (Step 4), and glue it into the groove in the first strip. The second strip will automatically create a rabbet for the photo and glass, see Cross Section at right.

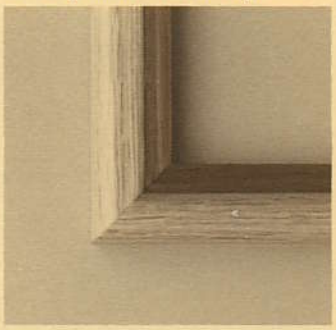

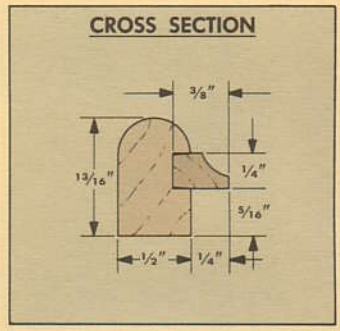

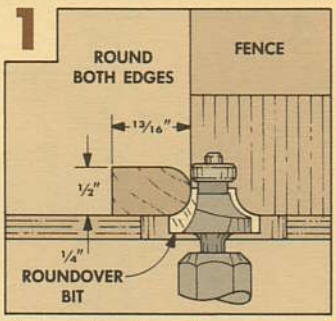

Cut strip 1/2" wide and round over both top edges.

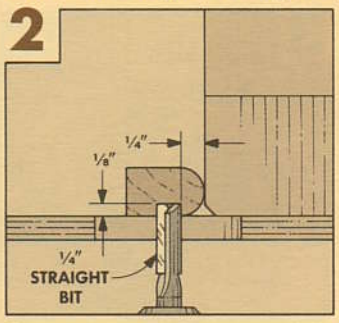

Cut groove with 1/4" straight bit to hold the second strip.

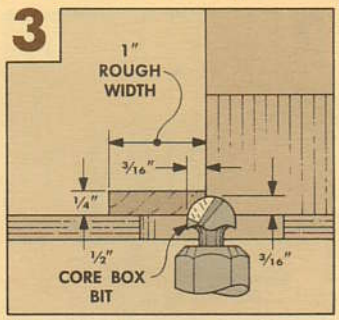

Cut 1/4"-thick second strip and cut cove with 1/16" shoulder.

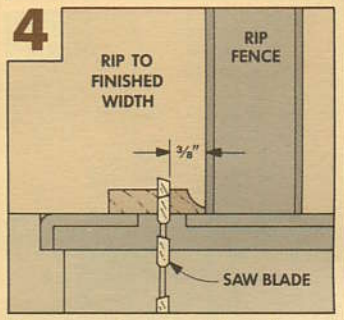

Rip second strip 3/8" wide and glue in groove to create rabbet.

Desk Frame

GIVE IT YOUR BEST SHOT

We wanted to build a self-standing frame — without using one of those cardboard backs with the hinged flap. After a little experimenting, we came up with a way to mount the frame to a small angled base.

The trick is to cut a groove in the bottom of the frame and a matching groove in the base. Then join the two with a key, refer to Fig. 1.

This groove-and-key trick solves the problem of supporting the frame, and it also provides a way to slide the photo and glass in and out of the bottom of the frame.

MAKING THE FRAME

To make this frame, you have to cut the molding strips a little differently than those shown on the previous pages. The molding for this frame starts as a strip ½" thick by 13/16" (or ¾") wide, see Fig. 2. (It can be even wider if you want a different profile on the molding.)

GROOVE. Then, instead of cutting a rabbet in the molding strips, a groove is routed down the inside edge to hold the picture and glass. The width of the groove is determined by adding the thickness of the glass (3/32"), the photo (1/32"), and the backing (1/16"), for a total of 3/16".

PROFILE EDGES. After the groove is cut, rout the profile on the edges. In this case, we used a ¼" round-over bit to round over all four edges, see Fig. 2.

MITER FRAME. Now miter these molding strips to length to fit around the photo. (See the article on page 20 for tips on this process.) And glue the frame pieces together.

GROOVE. When the frame is dry, rout a ¼"-wide groove centered on the bottom edge for the key. I cut this groove on the router table using stops on the fence to limit the length of the groove, see Fig. 3. (The groove should stop ¼" from the outside edges of the frame.)

Rout in successively deeper passes until the bit cuts through the groove on the inside edge of the frame. (Keep this set-up for routing the matching groove in the base.)

THE BASE. To make the base, I simply cut a 10° bevel on a block of wood, see Fig. 4. (Note: For safety, start with a block about 12" long, and cut it to final length after the bevel is cut.)

Next, I cut a groove to match the one in the bottom of the frame. Use the same set-up (with the stop blocks) on the router table to rout a ¼"-deep groove, see Fig. 5. Then use a ⅛" round-over bit to ease the edges.

THE KEY. Now, to join the frame to the base, rip a key ¼" (to fit the width of the grooves) by ½" (to match the total depth of both grooves.) Then round the ends to match the grooves.

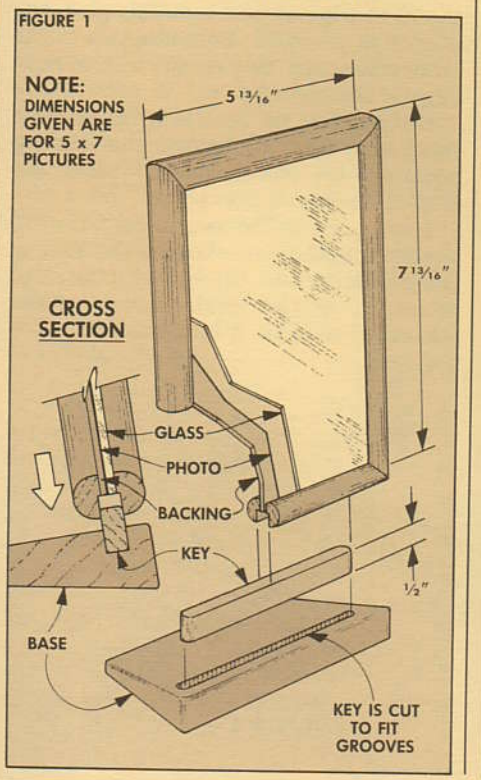

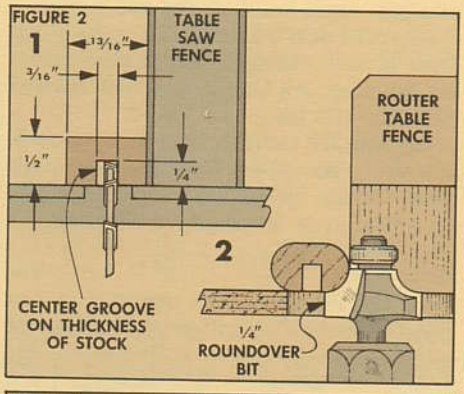

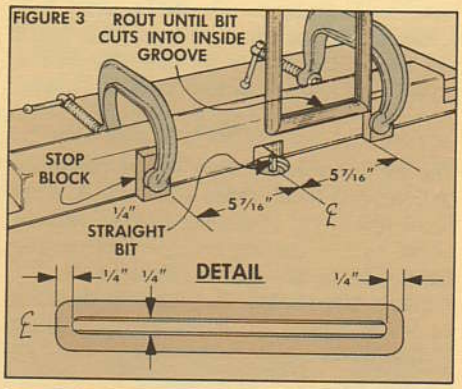

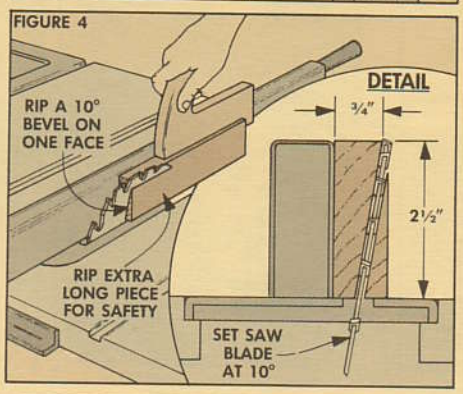

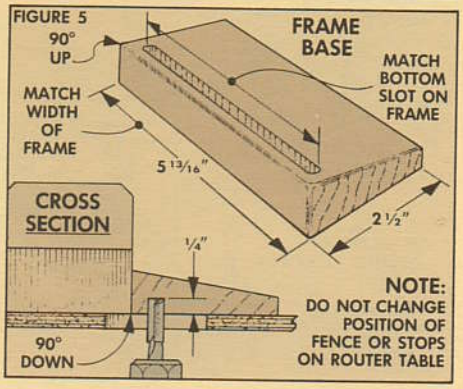

Miter Jig

TAKING THE PAIN OUT OF CUTTING MITERS

In order to cut molding pieces to make a frame, there are two basic criteria. First, the ends of all pieces must be mitered at exactly 45°. And, like pieces of the frame (the top/bottom, and the two sides) must be exactly the same length.

The easiest way to accomplish both tasks is to build a miter jig. The jig I use has two fences for cutting the miters at 45°, and an adjustable stop block for cutting the pieces to exact lengths.

This jig cuts 45° miters on molding strips for picture frames. The first cut is made on all pieces with the molding against the top fence.

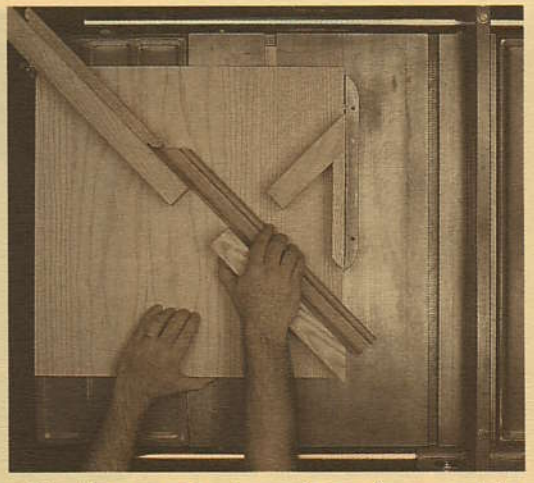

For the second cut, use lower fence, pushing the first end against the stop block to set length. Then miter the other end of the pieces.

THE BASE

To make the jig, begin by cutting a base out of ¾" cabinet grade plywood, 20" x 24".

The jig is guided on the table saw with a guide runner. To mount this runner, cut a dado about 6" from one edge, see Fig. 1. (Depending on your saw, position it so the right edge of the plywood extends beyond the right side of the blade, see Fig. 1.)

GUIDE RUNNER. After cutting the dado, cut a guide runner from hardwood to fit in the dado. I made it about 1" longer than the plywood base so it's easy to see and position in the slot on the table saw.

TRIM EDGE. Now the right edge of the base can be trimmed off, see Detail in Fig. 1. Cut this edge with the saw blade you'll use to cut the miters so the edge of the plywood is exactly in line with the blade.

FENCES

The jig has three fences: a first-cut fence (A), a second-cut fence (B), and a stop-block fence (C). (First-cut and second-cut refers to the cutting sequence of cutting the miters on the frame pieces.)

FIRST-CUT FENCE. To make the first-cut fence (A), I used 2x4 stock. Trim the stock down to 1½" square, and cut it to a length of 8", see Fig. 2.

SECOND-CUT FENCE. The second-cut fence is made from two strips of ¾"-thick stock with two spacer blocks between them. These spacers form a ⅜" slot used to mount the stop block, see Fig. 2.

To make the spacers, resaw a piece of ¾"-thick stock down to ⅜" thick. Then cut off spacer blocks 6" long and 1½" long, and glue them between the two strips.

STOP-BLOCK FENCE. The stop-block fence is made the same way as the second-cut fence but it's longer, and both spacers are only 1½" long, see Fig. 2.

SQUARE UP FENCES. When the glue is dry on the second-cut fence and stop-block fence, square up the front and back edges on a jointer, or by ripping a new edge.

ASSEMBLE JIG

Now the fences can be mounted to the plywood base. The critical part of making this jig is to align the first-cut fence exactly 90° to the second-cut fence, and also to make sure both fences are 45° to the right edge of the base (the path of the blade).

FRAMING SQUARE. To align the two fences, I used a framing square. Lay the square on the base so the 12" mark (on the inner edge of the framing square) is on the bottom right-hand corner, see Fig. 3.

Then place the other 12" inside mark on the right edge of the base. This gives the alignment you need. Both arms are 90° to each other, and they're 45° to the right edge of the base.

MOUNT FENCES. To attach the first-cut fence (A), slide it against the framing square so one end is at the 5" mark, see Fig. 3. Then glue it in place.

Next, position the second-cut fence (B) against the other inner edge of the framing square. (Make sure the end with the short spacer is in the inside corner of the square.) Then glue it in place.

FIGURE 1

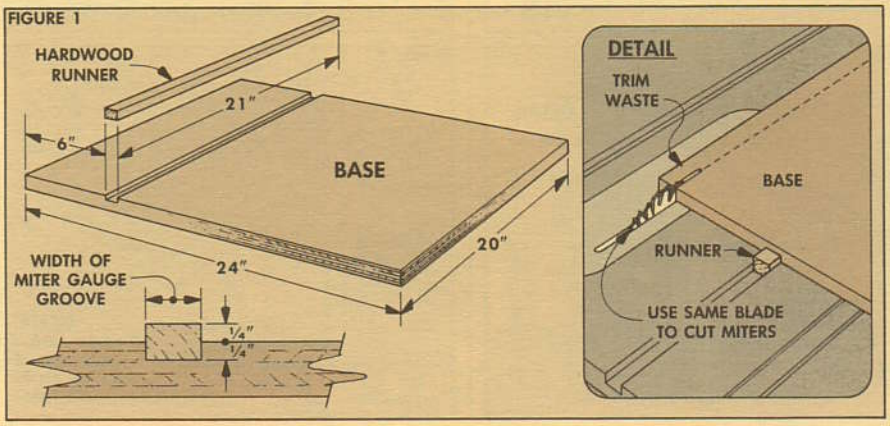

FIGURE 2

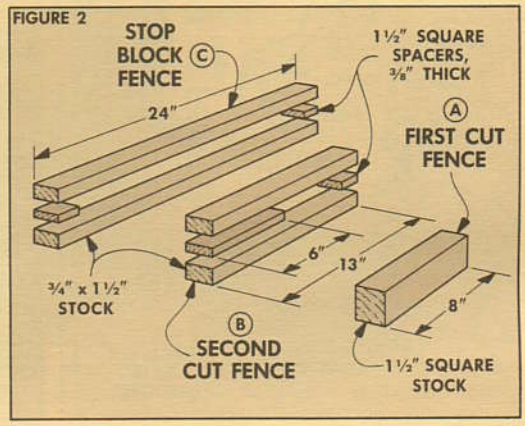

STOP-BLOCK FENCE. There's one more fence to attach. Use a straightedge to align the stop-block fence (C) with the second-cut fence, see Fig. 4. Allow a 3½" space between the two fences to create a gap for the molding pieces, refer to photo.

TRIM ENDS. When the fences are positioned, I added screws to secure them in place. Then place the jig on the saw and cut off the ends that are hanging over the right edge.

STOP BLOCK. At this point the fences are aligned to cut perfect 45° angles. All that's needed is a stop block. I made the stop block (D) from a piece of ¾"-thick stock cut to width to match the height of the fences, see Fig. 5.

CUT CHAMFERS. After cutting the stop block to size, cut 45° chamfers on the ends, see Fig. 5. These chamfers hold the end of the workpiece with the first miter as the second miter is cut, refer to photo. I also cut a small notch on the heel of each chamfer to act as a sawdust relief.

To hold the stop block against the fence, I drilled a counterbored hole for a 5/16" carriage bolt. (Be sure the hole is aligned with the slot on the stop-block fence.)

BLADE GUARD. The last step is to attach a blade guard (E) along the right edge of the jig, see Fig 6. Cut a piece of stock with 45° miters on both ends and glue it to the base, flush with the right edge.

TIPS. For some tips on using this miter jig, see the article on page 20.

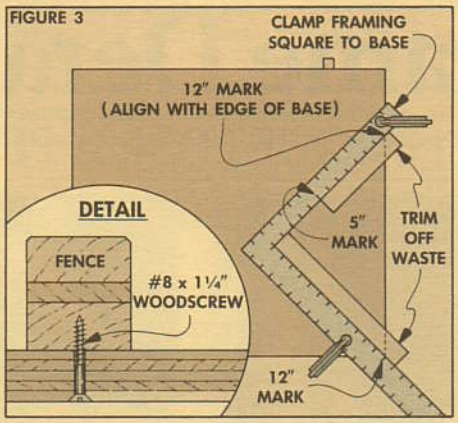

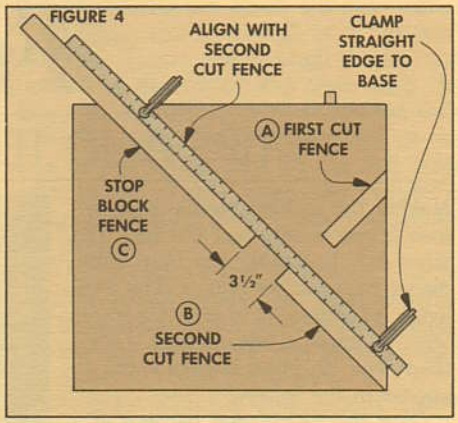

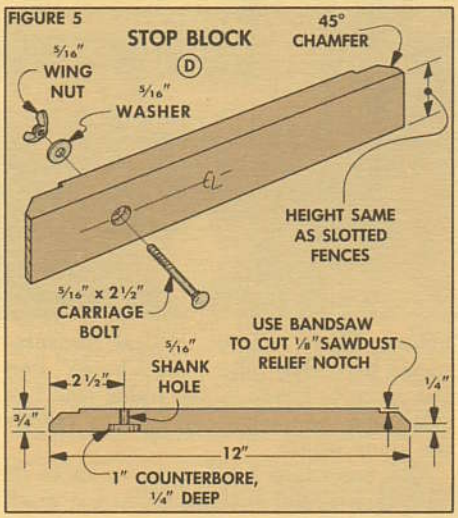

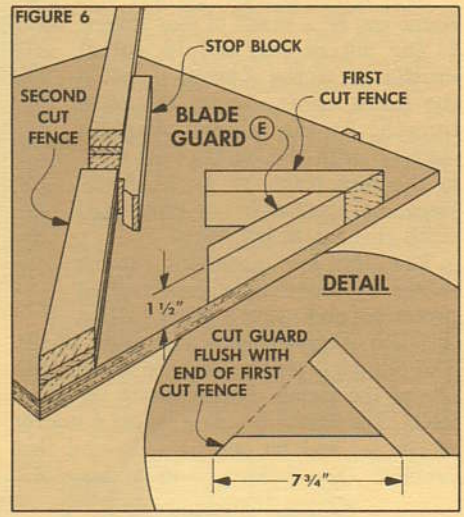

RADIAL ARM MITER JIG

The same problems exist on a radial arm saw as on a table saw. You have to cut 45° miters, and like pieces have to be the same length. One of the biggest problems is aligning the radial arm to exactly 45°. The solution is to build a jig without moving parts and make straight cuts with the saw.

To build the jig, I cut the 16" x 24" base from ¾" plywood, see Fig. 1.

FENCES. Then there are two fences, a right-hand fence (used to make the first miter cut) and a left-hand fence (used to make the second-cut). Both fences are cut 2"-wide by 18" long.

LAYOUT ANGLES

After cutting the fences, I laid them out on the base. To do this, first draw a center line on the base, see Fig. 1. Then measure down 3" from the top of the base and mark a centerpoint. (This is a reference point for laying out the angle of the arms.)

USE TRIANGLE. Now, to position the fences, lay a 45° triangle on the base with the 45° angle corner set on the reference point, see Fig. 1.

Then draw a line down the outside of the triangle for the left-hand fence. Flip the triangle over to make another 45° line for the right-hand fence.

ALIGN FENCES. To make sure the fences stay at 90° to each other, I set a framing square along the reference lines with the corner on the reference point, and clamped it to the base.

To position the fences, place the ends of each fence at the 2" marks on the outside of the framing square. Then glue and clamp the fences to the base. When the glue dries, screw the fences to the base.

MOUNT JIG. To prevent the jig from shifting position, I drilled holes and secured it to the table with hex bolts. You could also clamp the jig to the table.

USING THE JIG. To use the jig, cut the first miter on one end of all pieces with the stock tight against the right-hand fence.

Then clamp a stop block to the left-hand fence. Now position the first miter cut tight into the chamfered end of the stop block, and cut all pieces to the correct length, see Fig. 2.

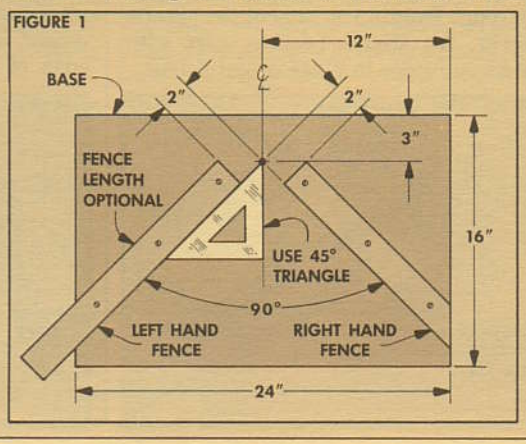

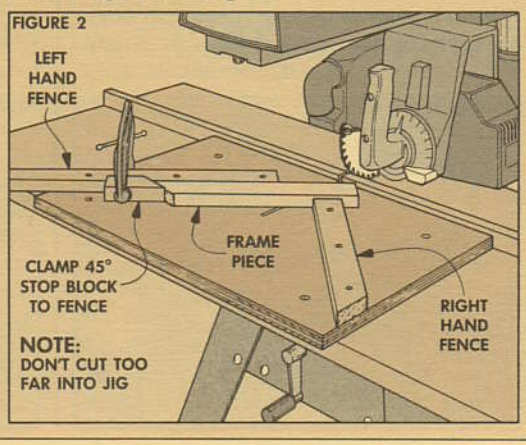

Frame Details

TIPS AND TECHNIQUES FOR A PERFECT FRAME

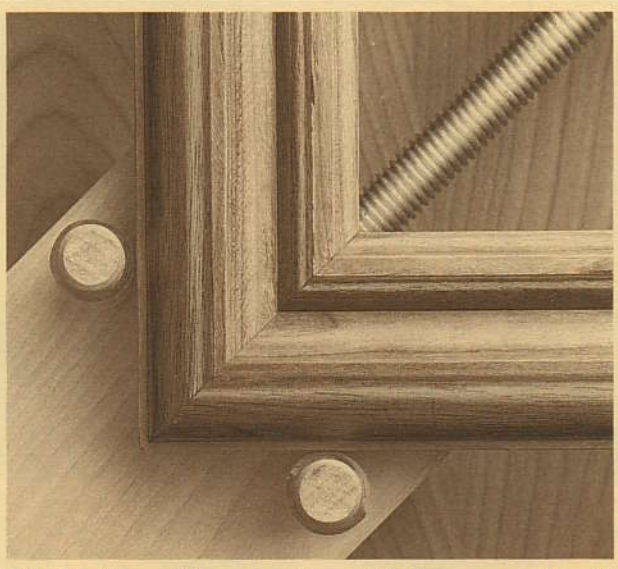

Making the molded pieces for a picture frame is only half the fun. The other half is cutting the four frame pieces with perfect miters. The challenge, of course, is to create a frame with no gaps at the corners. Okay, then why do gaps always seem to appear in the miters?

Gaps in the mitered corners of a frame can be a result of four things: 1) the miters may not be cut at *exactly* 45°; 2) the opposite pieces in the frame aren't *exactly* the same length; 3) the pieces weren't clamped with the miters held tight in the first place; or 4) the frame pieces have expanded or contracted (with changes in humidity).

The first two problems can be solved by following a good cutting procedure and using a miter cutting jig (such as the one shown on pages 18-19). The clamping problem can be solved with one of the frame clamps shown on pages 22-23. The fourth problem is just a matter of age — and no one has resolved that problem. (See Talking Shop on page 22.)

SETTING UP THE SAW

The procedure we use to cut miters is pretty easy. The first thing to consider is the saw blade. When cutting miters, I use a carbide-tipped *crosscut* blade. Combination blades are nice most of the time. But I use a crosscut blade with 60 or 80 teeth (such as the Freud thin kerf LU88M or LU85M) to cut miters. These blades make nice smooth cuts that are easier to glue.

SET BLADE. Even with a perfect blade, you can still have problems. When the blade is mounted, check it with a try square to make sure it's exactly 90° to the top of the table.

CUTTING THE MITERS

When the saw is set up, work can begin on mitering the frame pieces to length. But this is *not* just a matter of cutting 45° miters. There are *two* critical measurements here. The miters must be 45°, *and* the opposite pieces of the frame (the two sides, and the top/bottom) must be exactly the same length.

The procedure I follow has a lot to do with this second criteria. Often too much attention is paid to the 45° angle. But if opposite pieces are not *exactly* the same length you have effectively changed the joint angle, and there will be gaps even if the miters are cut at exactly 45°.

ROUGH LENGTH. I start by cutting all the molding stock to rough length. Working with shorter pieces is always easier.

To determine the rough length, measure the outside dimensions of the photograph or print you're framing. Also measure the *width* of the molding stock. Now add twice the width of the molding stock to the dimensions of the picture, and add at least 1" extra to give yourself some room to work.

TEST FRAME. After all of the pieces are cut to rough length, you can cut the miters. However, it's always best to start with some scrap pieces to make a test frame.

MITER JIG. The basic procedure is to cut a 45° miter on *one end* of all pieces first. Then the other end is mitered to final length.

You have several ways to go here. The miters can be made with the miter gauge on a table saw or on a radial arm saw. Either way, you can have problems because the markings on miter gauges and radial arms are notoriously inaccurate. I've found that it's worth it to build a miter jig, see page 18.

FIRST CUT. If you're using the table saw jig, the first cut is made by holding the *inside* edge of the molding against the "first-cut" fence of the miter jig, see Fig. 1. Hold it with a firm grip so the piece doesn't slide during the cut, and pull the jig back before releasing your grip.

If you're using a miter gauge, hold the inside edge of the molding against the face of the gauge. The cut is made so the long point of the miter leads through the saw blade, just as in Fig. 1.

FEED RATE. A slow, steady rate of feed works best. If you go too fast, there's a greater chance that the workpiece will slip. Just hold it steady and let the teeth do the cutting.

After making each cut, don't let the scrap pieces collect near the saw blade. I clear them away with a long stick.

SECOND MITER. After the first miter is cut on the ends of all the pieces, the second miter can be marked. This determines the final length of each piece.

However, it's not the overall length of each piece that counts, it's the length of the rabbet on the inside edge of each piece. The second miter must be cut so the photo or print (or mat) fits between the inside edges of the *rabbets*.

To mark this length, lay a ruler in the rabbet of one frame piece, see Fig. 2. The second miter is marked off on the inside edge of the rabbet so the measurement

FIGURE 1

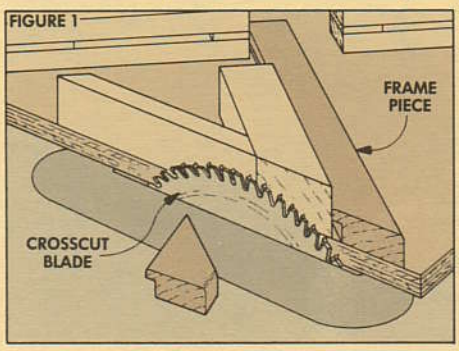

FIGURE 2

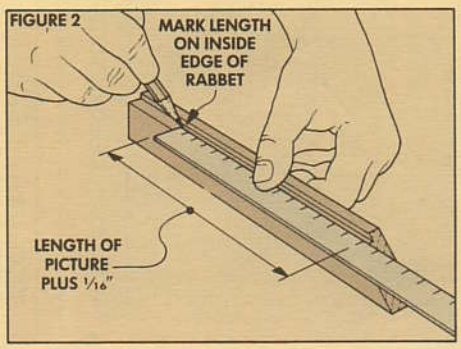

FIGURE 3

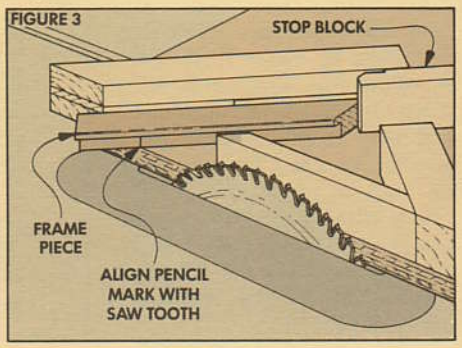

equals the size of the picture you're framing plus 1/16" extra.

The most common problem here is to make marks on all four pieces and then try to cut exactly on the marks. This is almost impossible to do.

The miter jig is designed to eliminate this problem by using a stop block so two pieces can be cut to exactly the same length. If you're using a miter gauge, add a auxiliary fence to it so you can clamp on a stop block.

CUT SECOND MITER. To set up for the second cut, hold the molding strip so the *outside* edge of the molding is against the "second-cut" fence on the jig, or facing the miter gauge.

Move the molding up to the saw blade so the pencil mark aligns with one tooth of the saw blade. (This is done with the saw turned *off.)* Rotate the blade so a tooth is resting right on the pencil mark. While holding the molding in place, tighten the stop block so it's tight against the mitered end, see Fig. 3.

Once the stop block is tightened down, turn on the saw and make the second cut on both pieces of the frame. If you're building a rectangular frame, you will have to readjust the stop block for the other two pieces.

When this cut is made, the small waste scraps will sometimes be caught by the blade and thrown out. Feed slowly and always stand to the left of the blade.

DRY ASSEMBLE. After the second miter is cut on all four pieces, dry assemble the frame and check for gaps. If the miters don't fit together tight now, they won't when they're glued either. When the joints fit tight on the scrap pieces, the real molding pieces can be cut.

ASSEMBLY

After the miters are cut, assembly can begin. There are a wide variety of frame clamps and methods (see page 22). No matter which clamp you use, it's important that all four corners be glued at the same time.

If you try to glue one corner at a time and then work around the frame, there will undoubtedly be a gap by the time you get to the last corner. By gluing them all at the same time, the gap will be spread out evenly on all four corners

GLUING. I use yellow (aliphatic) glue (such as Titebond) when joining frames. If there's a problem with yellow glue, it's that it dries quickly, especially on the end grain of miters.

The procedure I use is to apply the glue in little dots or lines. Don't spread it out thin (as when gluing edge grain) or it will soak down into the end grain and dry almost immediately. Since the glue is going on a little heavier in the lines or dots, put the glue on only one side of each joint. Keep it at least 1/8" away from the edges so it won't ooze out onto the faces of the molding.

CLAMPING UP. After the glue is applied, quickly clamp up the four sides of the frame. There's a tendency to overtighten here. Whatever clamping method you use, apply just enough pressure to get the miters to close up.

NAILS AND SPLINES

Once the frame is glued up, does it need any additional strength? That depends. On small frames (8x10 and smaller), I usually don't add any additional support after gluing. However, on larger, heavier frames, there's more weight and stress on the joint. Nailing (or adding a spline) helps hold the frame together if the glue joint should break.

Also, you might want to add extra support to a frame made from wide molding. In a wide piece of wood there's more movement with changes in humidity. This can break a glue joint. (See Talking Shop on page 22.)

NAILING. If you decide to nail the frame together, there are a couple of choices. With some clamps, you can nail it while it's in the clamps. I like to wait until the glue sets and then clamp each corner down to a bench or hold it in a vise when nailing. Whichever method, be sure it's secure, because nailing can break the glue joint.

Deciding *where* to nail is a "no-win" situation. If you nail through the top and bottom of the frame and then hang the frame on the wall, you won't see the nails from the sides. But I usually nail on the side of the frame (and fill the nail holes with putty). Then, when the picture is hung on the wall, there's more support for the joint.

When nailing, I use as small a brad as possible (small gauge, not small length). On large frames that require larger nails, predrill the holes. It's less likely to split the wood or break the joint.

SPLINES. Splines (sometimes called feathers) can also add strength when inserted into a groove cut across the corner. For a discussion of how to add a spline to a miter joint, see *Woodsmith* No. 36.

CLEANING UP. There are a few final steps when the glue is dry on the frame. I clean up all the corners with a chisel, carefully chipping off any glue that has oozed out of the miters. If the contours of the moldings don't come together exactly, feather them until they meet right at the joint line.

If there are any slight gaps in the miters, I don't usually fill them with wood putty. This will just emphasize the gap instead of hiding it. To mount the picture, I use the procedure explained below.

MOUNTING PICTURES

After building a frame, the next step is to mount the glass, picture, mat (if necessary), and backing into the rabbet.

NAIL IN PLACE. I use 1/2" brads behind the backing to hold everything in tight. If the frame is made with soft wood, you can press the brads in with needle-nose pliers. With harder woods, it's easier to use a special tool called a Brad Point Nailer. (About $10 in most mail order catalogs.)

Another method for pressing the brads into place uses Channel-Lock pliers, see art below. To prevent marring the frame, place a piece of cardboard on the outside edge of the frame. Then set the width of the pliers and squeeze the brad in place.

BACKING. When everything is in place, I cover the back with brown paper to make it dustproof. (A brown grocery bag works fine). Cut the paper a little smaller than the back of the frame. Then run a thin bead of yellow glue around the back edge of the frame and press the paper down.

Next use a spray mister or damp sponge to moisten the paper well. Keep the frame back-side up until the paper and glue dry. (A hair dryer speeds it along). When it's dry, the paper shrinks up drum tight.

HANG IT UP. The only thing left is to hang up the frame. For a heavy frame, I use two picture hangers and wrap picture wire through the loops, see drawing below. It puts less stress on the joints to hang a frame this way than from the top.

Finally, I glue rubber bumpers at the bottom to keep the picture from shifting.

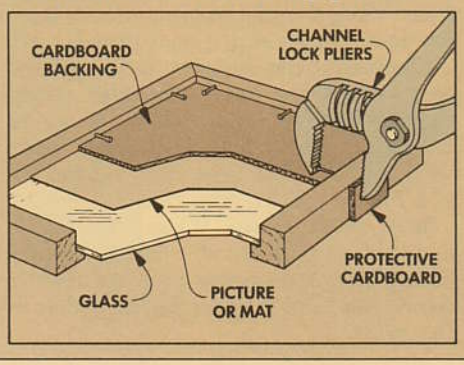

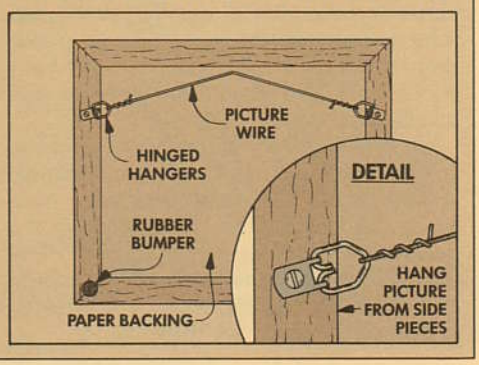

Talking Shop

SOME TIPS FROM OUR SHOP

DEEPER RABBETS

Since we used 4/4 stock (¾" to 13/16" actual thickness) to make the frames shown on pages 13 – 16, we were somewhat limited on the depth of the rabbet on the back of the frame. (The deepest rabbet on any of the moldings is ½".) In most cases, that's all you need to mount the glass, picture, and backing.

RABBETS FOR STRETCHER FRAMES. The rabbet may not be deep enough, though, if you're planning to mount an oil painting or needlework that's already wrapped around a stretcher frame. A stretcher frame itself can be ⅝" thick. You also have to add the thickness of the fabric and allow room for nails to hold the stretcher frame in place.

ADD BACK FRAME. To solve this problem, you can create a deeper rabbet by building a second frame (without a rabbet) and screw it to the back of the main frame.

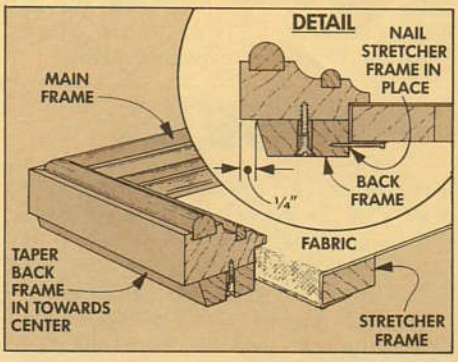

When building the back frame I cut the pieces to width and length so the back frame is inset ¼" from all of the edges of the main frame. I also taper the outside edges of the back frame in towards the center. This dresses the frame up and shows better if someone looks at it from the side.

OPEN MITERS

Why do miters on a picture frame sometimes open up after a period of time? And why do they usually open up on an *inside* corner, not the outside? The answers have to do with the way wood shrinks and swells over time.

SHRINKAGE. As the individual pieces of a frame dry out, most of the shrinkage occurs across the width and very little along the length. This means that as the two pieces in a miter joint start to dry and *shrink* in width, the angle of the miters change and a gap opens up on the *inside* corner of the joint, see drawing.

SWELLING. For the same reason, if the two pieces should *swell* (such as on a humid day), the inside corner will remain tight, but a gap can open up on the *outside* corner, see drawing. (This is less likely though. More frames seem to dry out when the heat is turned on in the winter.)

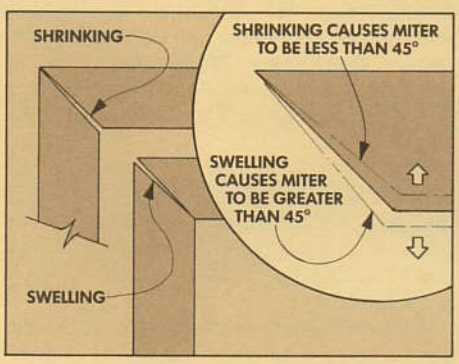

WHAT CAN BE DONE? Is there any way to prevent a gap from developing? First of all, be aware that the wider a frame is, the more it can swell or shrink. I have a frame that I built about 15 years ago from some 2"-wide pine molding. When I built the frame, the miters were tight. Over the years, gaps of 1/16" have opened up.

Not only was my pine molding wide, it wasn't very dry when I cut the frame pieces. It's best to start out with wood that has been dried down to under 9% moisture content. (If you specify kiln-dried hardwood, it's usually under 9%.)

Finally, as mentioned in the article on pages 20 – 21, you may want to add extra support (nails or splines) to a wide frame. This can help resist movement to a certain extent, but if there's a lot of shrinkage, it can bend or pull out a nail.

MITER SPRING CLAMPS

Every time I get a woodworking catalog in the mail there's some new kind of clamping system for frames. While working on the framing articles for this issue, we decided to take a look at three popular frame clamps on the market. (See sources for these clamps on the next page.)

Sometimes the simplest ideas are the best. That's the case with miter spring clamps. They're simply pieces of spring steel rod shaped into "C-shaped" rings with pointed ends. (The rings remind me of a ring in a bull's nose.)

HOW THEY WORK. When the ring is mounted on a corner of a frame, it grabs both pieces and applies pressure exactly where you want it — across the middle of the miter.

SPECIAL PLIERS. Opening up the rings is a trick. They're so strong that you need a special tool that works like a pair of snap-ring pliers to spread the ring open. And the tool is expensive — about $40.

To save this expense, you can make the pliers out of some scrap wood, four screws, a bolt, and a spring, see photo. (Note: We're offering the rings as well as the hardware and plans for making the pliers, see Sources, page 24.)

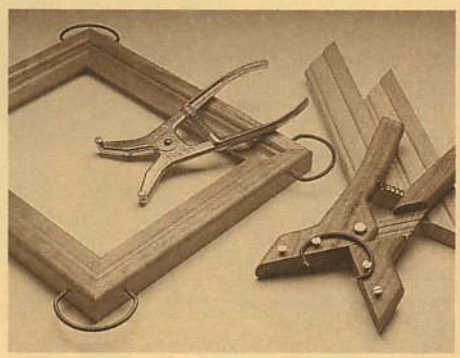

A PROBLEM. Although these ring clamps are one of my favorite methods for holding miters, there's one problem with them. The rings are so powerful they leave slight indentations in the sides of the frame. These can be filled with a little putty, or, if you're nailing the frame after the glue dries, you can drive the nails in at these points.

FOUR-CORNER CLAMP

Once it's set to the correct size, one of the easiest framing clamps to use is a four-corner clamp. This clamp has four corner blocks that are connected by threaded rods and thumb nuts. The rods run around the outside of the frame and fit into threaded holes in the blocks.

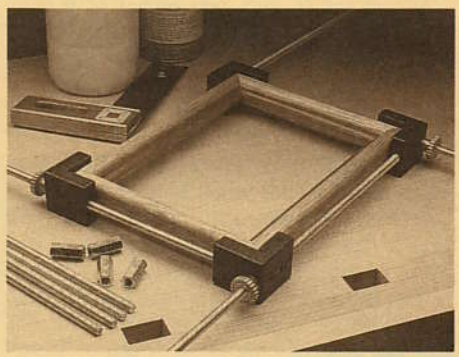

The basic clamp will hold frames up to 24" by 24", but you can buy a larger set that includes more rods and couplers to clamp up to 48" square.

ADVANTAGE, DISADVANTAGE. The advantage of this clamp is that once the clamp is set up for the frame you're gluing, the pieces are easy to set into the corners.

One disadvantage is that the clamp doesn't apply the pressure toward the *center* of the frame — that's the best kind of pressure when gluing up all four corners at the same time.

BAND CLAMPS

Band (or web) clamps can be used to apply even pressure around frames of just about any size as well as irregularly-shaped frames and projects.

Traditional band clamps (on left in photo) are made of nylon webbing and usually include metal 90° corners for clamping up frames. (The corners can dent the frame if they're tightened too much.)

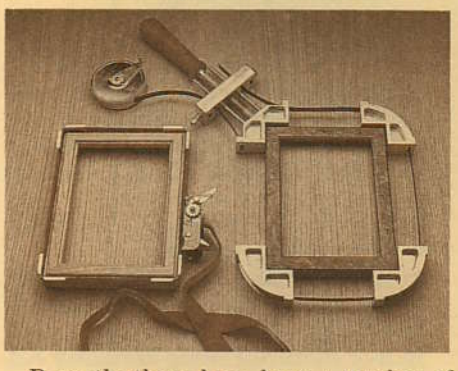

Recently there have been a number of band clamps introduced that use a steel strap (like the "Merle" clamp on the right) or heavy web that's threaded through large metal or plastic corners and then tightened down with a screw handle. (The excess strapping or web is held in a device that reminds me of a fishing reel.)

ADVANTAGE, DISADVANTAGE. The advantage of all of the band clamps is the uniform pressure you can bring to bear on all four corners of the frame. As long as the miters are all cut to 45°, the band automatically pulls the joints closed as it tightens and forces the corners square.

Most of the problems I've had with band clamps have to do with all the excess band you have when working on a small frame. The excess band, and the screw handles and large corners on the newer styles, can get in the way, especially if you're assembling a small frame.

FRAME CLAMP SOURCES

All of the frame clamps listed above are sold by:

GARRETT WADE COMPANY, INC., 161 Avenue of the Americas, New York, NY 10013-1205; 800-221-2942.

WOODCRAFT, 41 Atlantic Ave., Box 4000, Woburn, MA 01888; 800-225-1153.

The Merle Corner Clamp is sold by:

MLCS, LTD., P.O. 53, Rydal, PA 19046; 800-533-9298.

SHOP-MADE FRAME CLAMP

We developed the frame clamp shown here as an alternative to commercial clamps. It's made from four blocks connected with threaded rod. (You can buy the hardware locally. We're also offering the hardware and blocks in kit form, see page 24.)

CUT BLANKS. To make the four corner blocks, start by cutting three ¾"-thick blanks to a width of 3½" and length of 17". Next, cut a ½" dado, ½" deep down the center of *one* of the blanks. Then cut off four 4"-long pieces from each blank.

BUILD-UP BLOCKS. Since the threaded rods have to cross in the center when holding a frame (refer to Fig. 4), the dadoes on two of the blocks can't align with the dadoes on the other two blocks. So when I built up the corner blocks, I built two different sets of blocks, see Fig. 1.

To make the two blocks labelled "A", glue three pieces together so the piece with the dado is in the center, and the dado faces up, see Fig. 1. In the two blocks labelled "B", glue the dadoed piece on top with the dado facing down.

DRILL HOLES. The corners of the frame are held in place between two ½" x 4" dowel pegs on top of the blocks. To make the fixture so it holds both large and small frames, drill two holes close together and two more holes farther apart, see Fig. 2.

TUBING. Next, I cut 1"-long pieces of plastic tubing and slipped them over the dowels, see Fig. 2. The tubing protects the frame pieces when pressure is applied. If the tubing is moved high on the peg, it presses against the *top* of the frame to offset the pressure applied *below* the frame by the threaded rod.

ASSEMBLY. Now assemble the fixture by slipping a 36"-long piece of ½" threaded rod through the dadoes. Then add wing nuts on both ends.

USING THE FIXTURE. To use the fixture, I always start by waxing the top of the blocks to keep the frame from sticking if any glue oozes out of the miter. Then lay the blocks down on a flat surface so the threaded rods cross each other in an "X". (Note: Unless the frame is square, the rods won't cross at 90°.)

SET UP WITH PLYWOOD. With this fixture, the pieces don't automatically align. It takes some jockeying around. I found that cutting a piece of scrap plywood the same size as the frame helps initially align the blocks, see Fig. 3.

Once the blocks fit tight around the plywood, loosen the wing nuts slightly (one turn each) and lift out the plywood. Then loosen one wing nut until it's backed off about ½" from the block, see Fig. 4.

GLUE UP FRAME. Now apply glue to the miters on two of the frame pieces. Then set this corner in place so it's *opposite* the loosened block. Next glue the remaining three corners and set the pieces in place. Now slide the "loose" block in and tighten all the wing nuts.

After everything is in place, check each corner of the frame to be sure the joints are tight. Don't overtighten. Just bring them together until the joint closes up.

One more thing. We found that this clamp works best for square frames or those that are close to square (5x7 and 8x10). It's harder to hold long, rectangular or odd-shaped frames tight in this clamp.

FIGURE 1

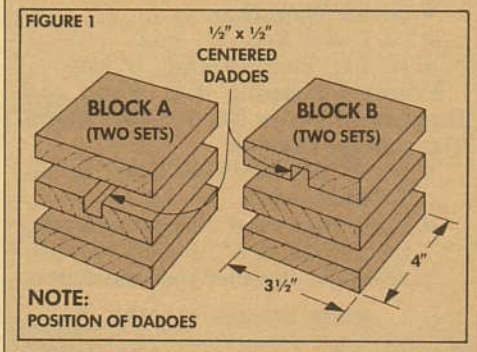

FIGURE 2

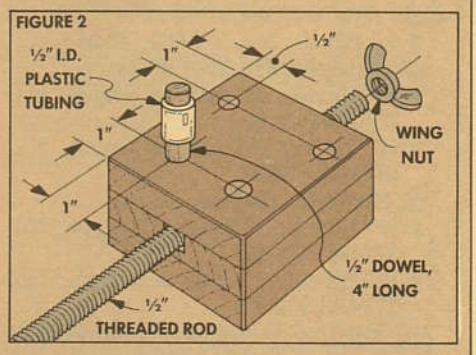

FIGURE 3

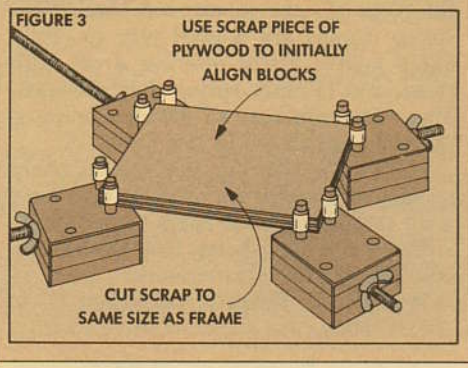

FIGURE 4

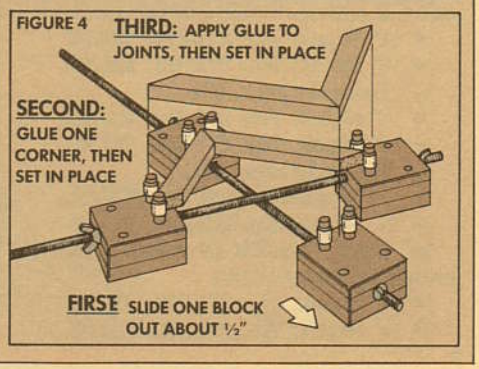

Sources

STEP STOOL

Woodsmith is offering all of the hardware needed to build the step stool.

Step Stool Hardware, Order No. 760-110, $6.95. This package includes:

- (1 pair) Solid Brass Hinges, 1½" long, 2" open width, with screws.
- (1) Brass Chain, 12" long, with two No. 3 x ½" roundhead brass screws.
- (1) Brass-Plated Elbow Catch and Strike Plate, screws, nail included.

DISPLAY EASEL

Woodsmith is also offering the hardware needed to build the display easel.

Display Easel Hardware, Order No. 760-210, $6.95. This package includes:

- (12) Birch Gallery Spindles, 2⅜" overall length.
- (2) Birch Tie Rack Pegs, 2 7/16" long, fit 3/16" hole.
- (1) 1" Brass Turn Button with No. 3 x ½" Fh Brass Woodscrew.

ROUTER BITS FOR MOLDINGS

All of the picture frame moldings shown on pages 13-16 are made with only eight router bits. We are offering these bits individually or as a set with either ¼" shanks or ½" shanks. (We recommend ½" shank bits if your router collet will accept them.)

All of the bits are heavy-duty, carbide-tipped steel. We use these same bits in the *Woodsmith* shop.

⅛" Straight Bit, 7/16" cutting length, single flute (¼" shank only).

- ¼" Shank, No. 271-603, $9.95.

¼" Straight Bit, two flutes.

- ¼" Shank, 1" cutting length, No. 271-625, $10.95.
- ½" Shank, ¾" cutting length, No. 271-665, $12.95.

½" Straight Bit, two flutes.

- ¼" Shank, 1" cutting length, No. 271-643, $12.95.
- ½" Shank, 1" cutting length, No. 271-676, $12.95.

⅛" Round-Over Bit (sometimes called a corner-rounding bit).

- ¼" Shank, No. 271-811, $23.95.
- ½" Shank, No. 271-821, $26.95.

¼" Round-Over Bit.

- ¼" Shank, No. 271-814, $23.95.
- ½" Shank, No. 271-823, $24.95.

⅜" Round-Over Bit.

- ¼" Shank, No. 271-817, $24.95.
- ½" Shank, No. 271-826, $25.95.

½" Core Box Bit (sometimes called a roundnose bit).

- ¼" Shank, No. 271-721, $21.95.
- ½" Shank, No. 271-730, $25.95.

¾" Core Box Bit.

- ¼" Shank, No. 271-724, $22.95.
- ½" Shank, No. 271-733, $29.95.

Set of Eight Bits (listed above).

- ¼" Shank, No. 760-300. Total price if the bits are purchased separately: $151.60. Price for the set of all eight bits: $134.95
- ½" Shank, Order No. 760-400. (Note: ⅛" Straight Bit will have ¼" shank.) Total price if the bits are purchased separately: $169.60. Price for the set of all eight bits: $149.95.

CROSSCUT BLADE

In the article on making picture frames, we mentioned the importance of having a good crosscut blade for cutting miters. The one we use is a thin kerf Freud LU88M. You can find this blade at many woodworking stores and in mail order catalogs, or you can order it through *Woodsmith*:

Freud LU88M Saw Blade, thin kerf (.090 inch), 10" dia., 60 teeth, ⅝" bore, **Order No. 226-115, $69.90.**

FRAME CLAMPING JIG

On page 23, we showed plans for a shop-made jig for clamping picture frames. Most of this is standard hardware, but if you can't find it locally we are offering all of the hardware as a kit. Another kit is available that includes the hardware and pre-drilled maple blocks.

Frame Clamping Jig Hardware, Order No. 760-610, $9.95. Includes:

- (2) Threaded Rods, ½" x 36".
- (4) ½" Wing Nuts.
- ½" Dowel Rod, 36" long.
- ½" I.D. Plastic Tubing, 8" long.

Frame Clamping Jig, Wood and Hardware, Order No. 760-620, $24.95. This package includes:

- All of the hardware listed in No. 760-610 (above).
- Four Hardwood Blocks measuring 2¼" x 3½" x 4". Blocks are pre-drilled for threaded rods and dowels.

MITER SPRING CLAMPS

On page 22, we mentioned that miter spring clamps are a good way to clamp miter joints. We're offering a set with three sizes of miter spring clamps (rings). These three sizes are all you need to clamp the moldings shown in this issue.

We're also offering the special pliers needed to install them or plans and hardware to build a set of pliers out of wood.

Miter Spring Clamp Set, Order No. 760-710, $19.95. This includes:

- (4) Small Rings for moldings ½" to 1" wide.
- (4) Medium Rings for moldings 1" to 1½" wide.
- (4) Large Rings for moldings 1½" to 2¼" wide

Metal Spring Clamp Plier Tool, Order No. 611-404, $39.95.

Shop-Made Wooden Spring Clamp Plier Tool, (Includes plans and hardware, you provide the wood.) **Order No. 760-720, $4.95.**

PICTURE HANGING SUPPLIES

Once you finish building a frame, the best way to hang it on the wall is with hinged hangers and picture frame wire, see the box on page 21. We're offering three kits that include brass-plated hangers, picture frame wire, hooks, and rubber bumpers to keep the picture from shifting on the wall.

Lightweight Picture Frame Hanging Kit, (for 8x10 frames and smaller) **Order No. 760-810, $5.95.** Includes enough material for six frames:

- (12) Hinged Hangers, 1⅛" long, with ½"-long screws.
- (10 ft.) Braided Picture Frame Wire.
- (12) Rubber Bumpers, self-adhesive.
- (6) Lightweight Wall Hooks.

Heavy Picture Frame Hanging Kit, Order No. 760-820, $9.95. Includes enough material for six frames:

- (12) Heavy Hinged Hangers, 1¾" long with ½"-long screws.
- (15 ft.) Braided Picture Frame Wire.
- (12) Rubber Bumpers, self-adhesive.
- (6) Wall Hooks.

Extra Heavy Frame Hanging Kit, Order No. 760-830, $12.95. Includes enough material for six frames:

- (12) Extra Heavy Hinged Hangers, 1⅜" long, with ⅝"-long screws.
- (25 ft.) Braided Picture Frame Wire.
- (12) Rubber Bumpers, self-adhesive.
- (6) Extra Heavy Wall Hooks.

ORDERING INFORMATION

To order the project supplies, mail in the order form on the protective cover of this issue, or call the toll-free number listed below. If ordering by mail, send your order and payment to:

Woodsmith Project Supplies
P.O. Box 10350
Des Moines, IA 50306

Phone Orders: 800-444-7002. Customer service is available from 8:30 AM to 4:30 PM Central Time, weekdays only. We accept MasterCard and VISA credit cards.

Allow 4-6 weeks for delivery. Add $1.50 shipping charge to order. (Iowa residents add 4% tax.) Prices good through 6-30-89.